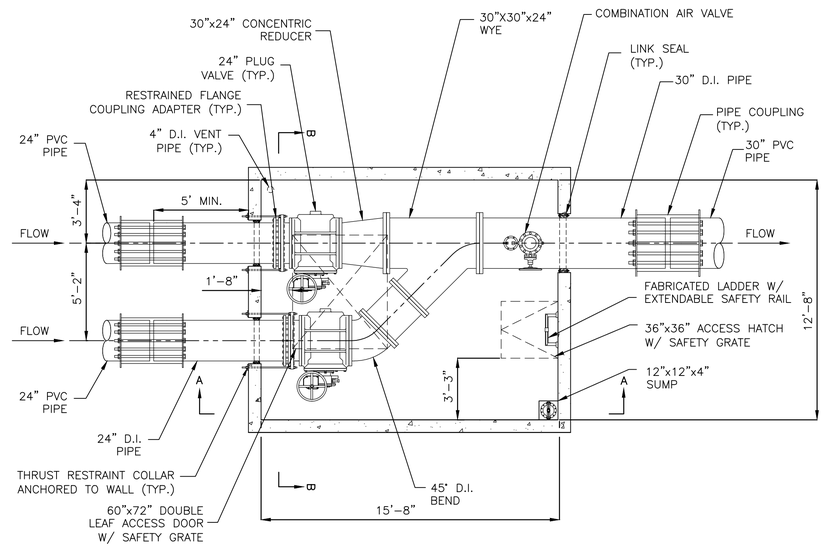


PLAN

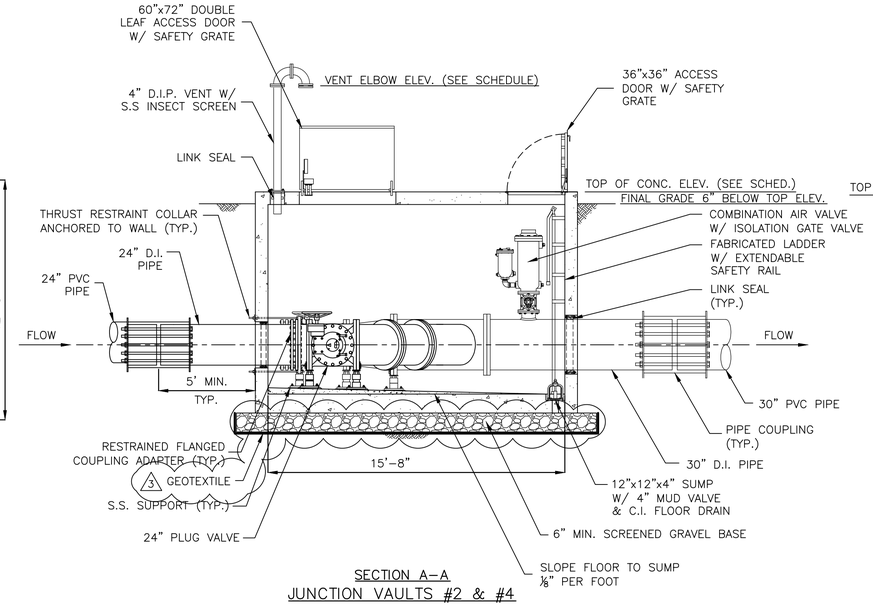


SECTION A–A
JUNCTION VAULTS #2 & #4

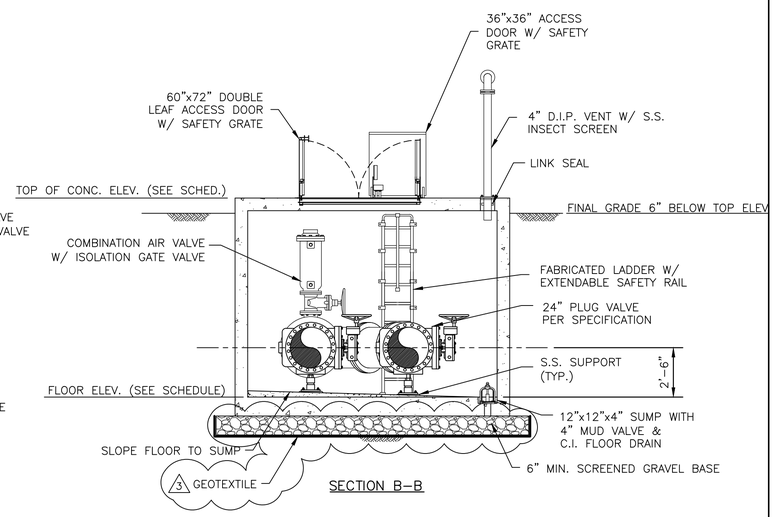


SECTION B–B

| JUNCTION VAULT SCHEDULE | | | | |
|---|---|---|---|---|
| # | TOP OF CONC. ELEV. | FLOOR ELEV. | COMB. AIR VALVE SIZE | BOTTOM OF VENT ELBOW EL. |
| 1 | 25.9 | 15.8 | 10" | 29.4 |
| 2 | 27.4 | 18.0 | 10" | 30.9 |
| 3 | 17.4 | 8.7 | 10" | 23.5 |
| 4 | 9.0 | −1.4 | 8" | 23.5 |

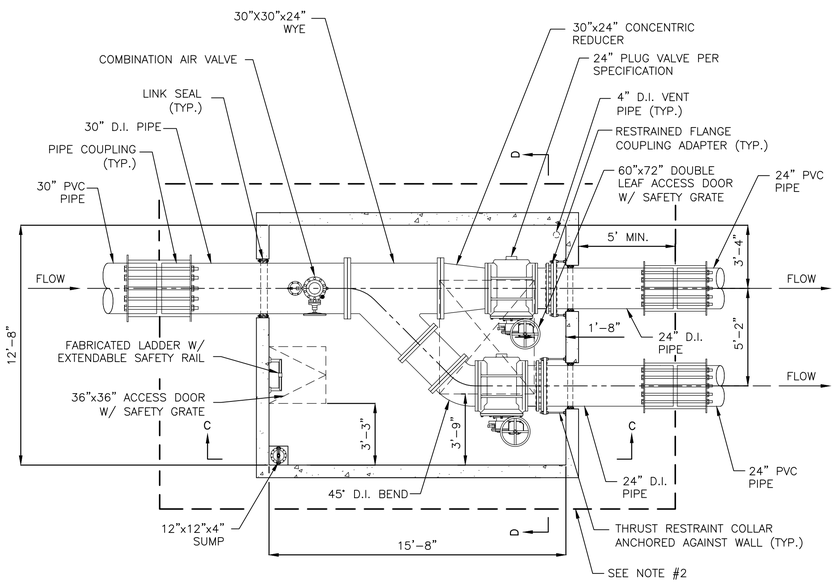


PLAN

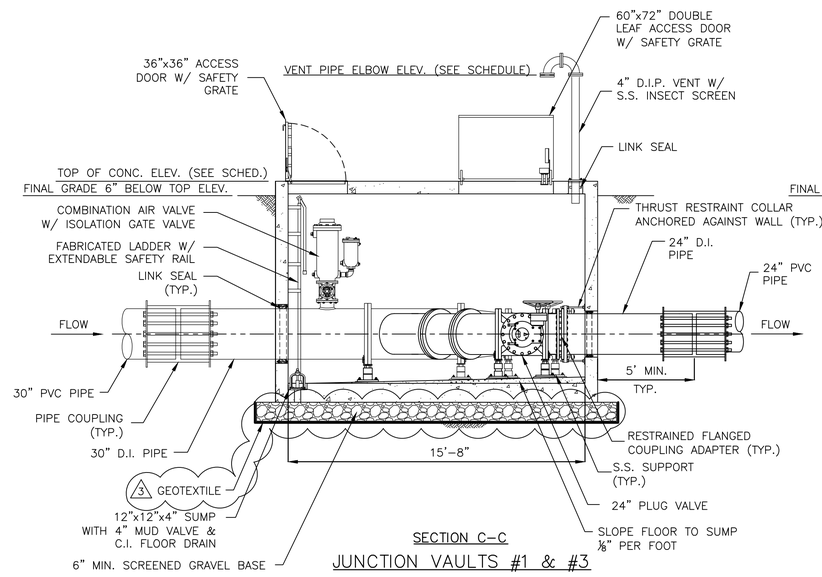


SECTION C–C
JUNCTION VAULTS #1 & #3

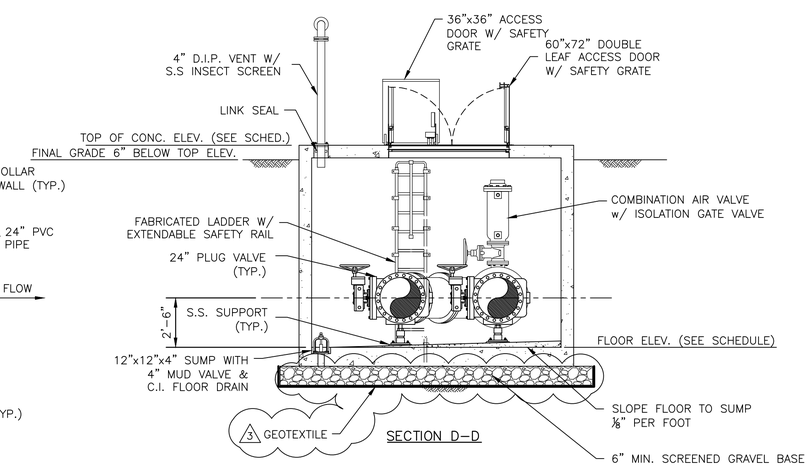


SECTION D–D

NOTES:

1. CONTRACTOR SHALL PROVIDE 1½" PVC CONDUIT TO CONNECT TO ACCESS DOOR CHANNEL FRAME COUPLING TO CONVEY DRAINAGE AWAY FROM JUNCTION VAULT.
2. ALL ASSOCIATED PIPING (INCLUDING 5–FOOT STUBS OUTSIDE OF THE VAULT), FITTINGS, APPURTENANCES, BENDS, VALVES, LADDERS, SUPPORTS, DOORS, VENTS AND ALL WORK ASSOCIATED WITH THE MANUFACTURING AND INSTALLATION OF THE JUNCTION VAULT SHALL BE PAID FOR AT THE CONTRACT UNIT PRICE EACH FOR "JUNCTION VAULT".
3. ALL PLUG VALVES ARE NORMALLY OPEN IN FULL OPEN POSITION.

**ADDENDUM NUMBER 3**

THIS LINE IS ONE INCH LONG WHEN PLOTTED AT FULL SCALE ON A 22" X 34" DRAWING

STATE OF CONNECTICUT CHARLES C. CHIO No. 27631 LICENSED PROFESSIONAL ENGINEER

CDR MAGUIRE
2080 Silas Deane Highway
Rocky Hill, Connecticut 06067

| MARK | DATE | DESCRIPTION | BY | APP'D |
|---|---|---|---|---|
| 0 | 4/25/13 | ISSUED FOR DEEP APPROVAL | JIG | CCC |
| 1 | 7/22/13 | REVISED PER DEEP COMMENTS | JIG | CCC |
| 2 | 7/22/13 | ISSUED FOR BID | JIG | CCC |
| 3 | 9/10/13 | REVISED PER ADDENDUM NUMBER 3 | JIG | CCC |

| | |
|---|---|
| PROJECT NO.: | 14712.02 |
| DESIGNED BY: | CC |
| DRAWN BY: | JG |
| CHK'D BY: | CCC/MJK |
| DATE: | 07/22/13 |
| SCALE: | 1/4" : 1'–0" |

SEWAGE FORCE MAIN
MIDDLETOWN, CONNECTICUT

PRECAST JUNCTION VAULT DETAILS

DRAWING NO. C503

SHEET 42 OF 61

DRAWING FILE: G:\JOBS\14712.02-Middletown_PS_FM_Final_Design\ACAD\CIVIL\CONTRACT 1\CIVIL\2013-02-26 14712 Detail Sheets.dwg PLOTTED: Sep 10,2013-4:07pm REVIEWED BY: CIVIL: INITIAL&DATE ARCH: INITIAL&DATE STRU: INITIAL&DATE PLUM: INITIAL&DATE FIRE: INITIAL&DATE MECH: INITIAL&DATE ELEC: INITIAL&DATE