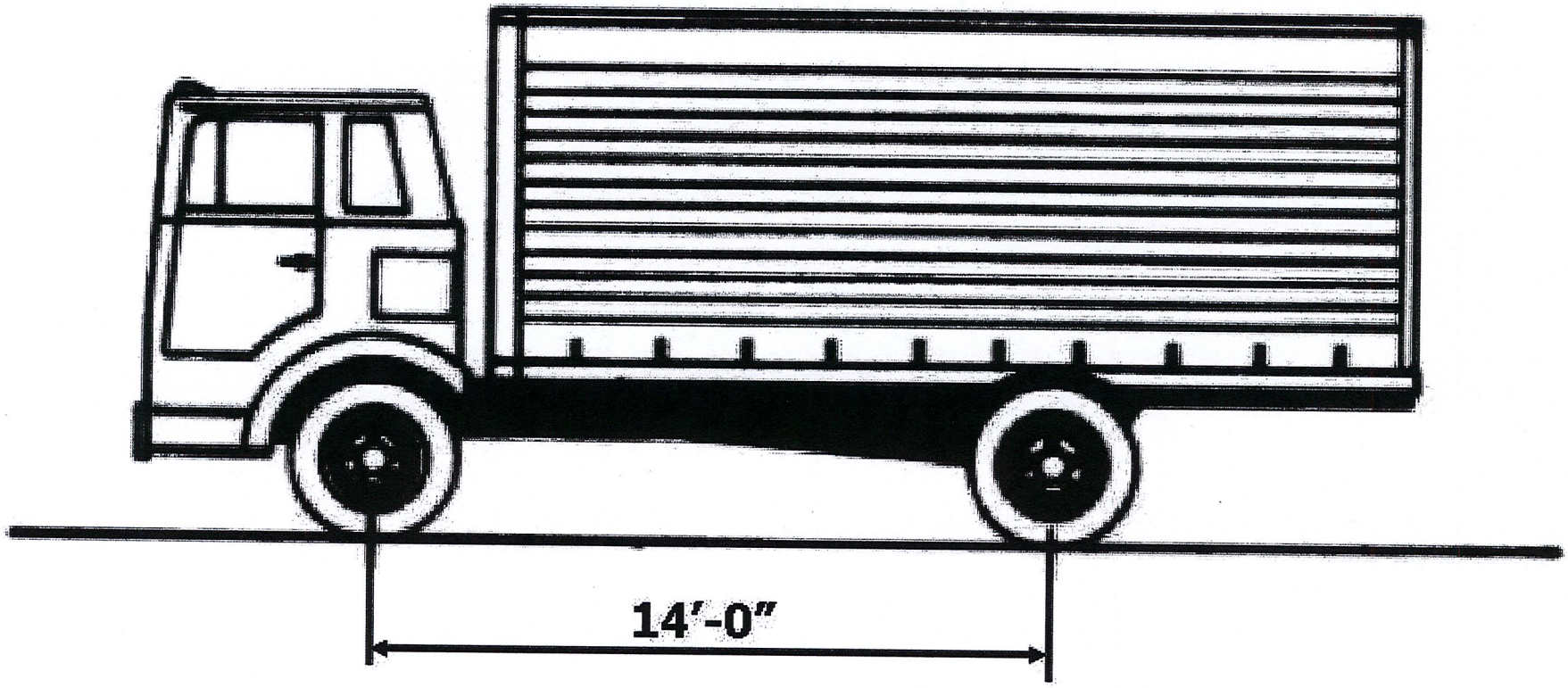

	FRONT AXLE LOAD	REAR AXLE LOAD
H-8	3,200 LBS.	12,800 LBS.