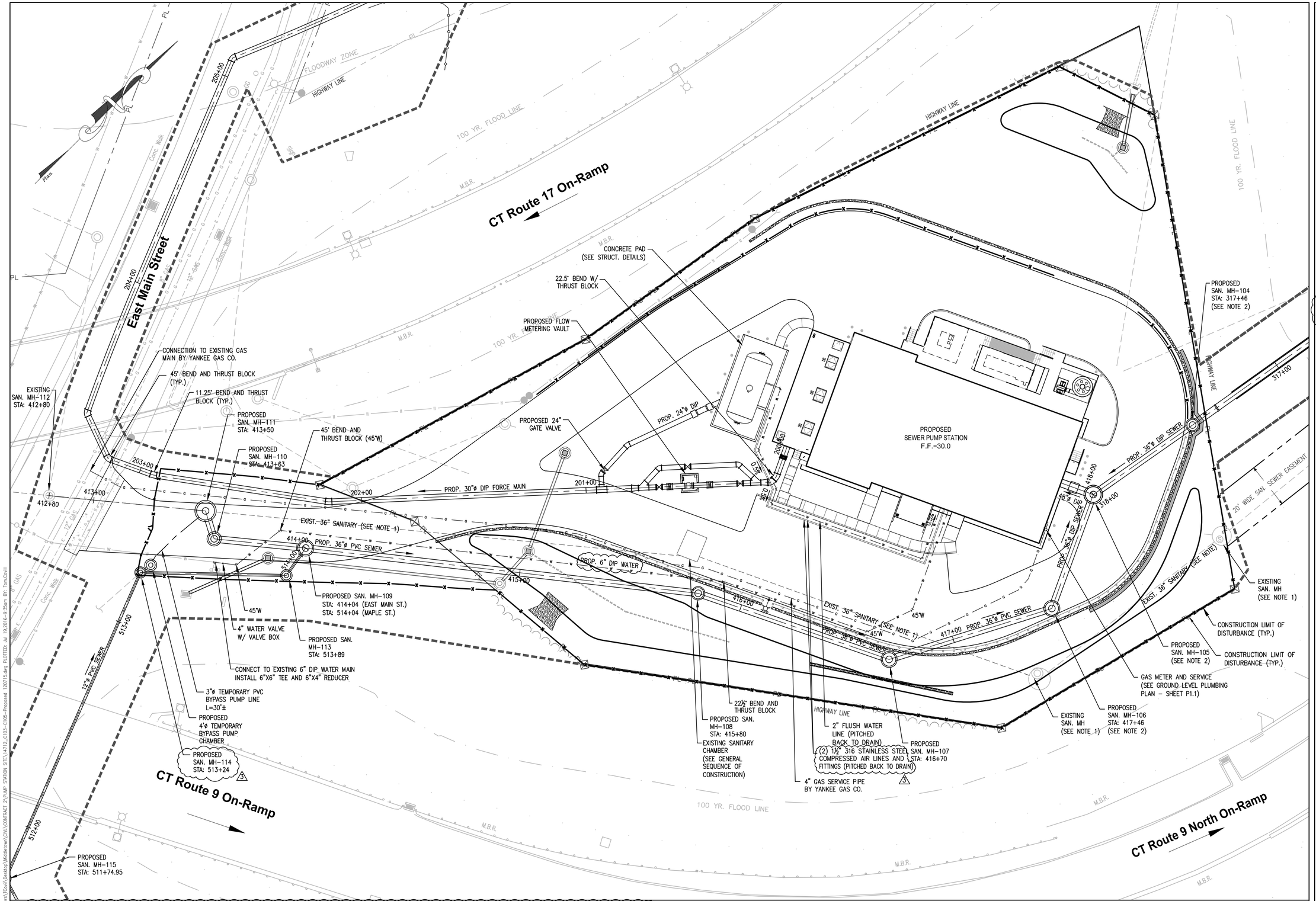

NOTES:

1. REFER TO DEMOLITION PLAN C–1.2 AND GENERAL SEQUENCE OF CONSTRUCTION NOTES ON SHEET G–0.4 REGARDING MAINTENANCE OF SEWAGE FLOWS DURING CONSTRUCTION.
2. PROVIDE PILE SUPPORTED FOUNDATION AT SMH 104, 105, 106 & ON ALL CONNECTING PIPES BETWEEN MANHOLE STRUCTURES AND BETWEEN SMH 105 AND THE BUILDING (REFER TO STRUCTURAL DETAIL).
3. THE GAS SERVICE WILL BE INSTALLED BY EVERSOURCE–GAS FROM THE GAS MAIN IN THE STREET TO THE GAS METER. THE CONTRACTOR SHALL FULLY COORDINATE WITH EVERSOURCE TO INSTALL THE GAS SERVICE.

SCALE
HORIZ. 1"=20' 0 20' 40' 60'

CDR MAGUIRE
2080 Silas Deane Highway
Rocky Hill, Connecticut
TEL. (860) 563-3158
www.cdrmaguire.com

REVISIONS

Number	Description	Date
1	ADDRESS DEEP REVIEW	5/6/2016
2	BID ADDENDUM 1	7/11/2016
3	BID ADDENDUM 2	7/19/2016

FRANCIS T. PATNAUDE INTER-MUNICIPAL PUMPING STATION

MIDDLETOWN, CT

YARD PIPING PLAN

PROJECT NUMBER: 14712
DESIGNED BY: RED
DRAWN BY: RED
DATE: FEBRUARY 23, 2016

SHEET NUMBER:

C-1.5

DRAWING FILE: C:\Users\TCovil\Desktop\Middletown\CIVIL\CONTRACT 2\PUMP STATION SITE\14712_C103-C105-Proposed 120715.dwg PLOTTED: Jul 19,2016-9:35am BY: Tom Covill

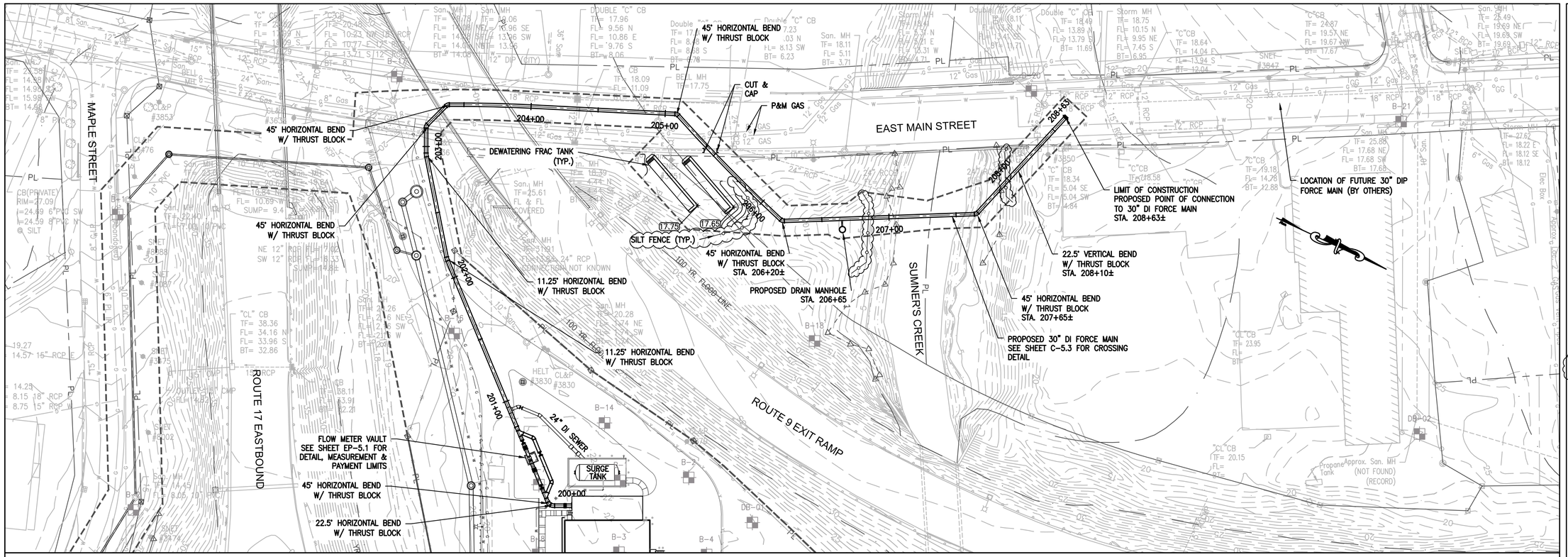

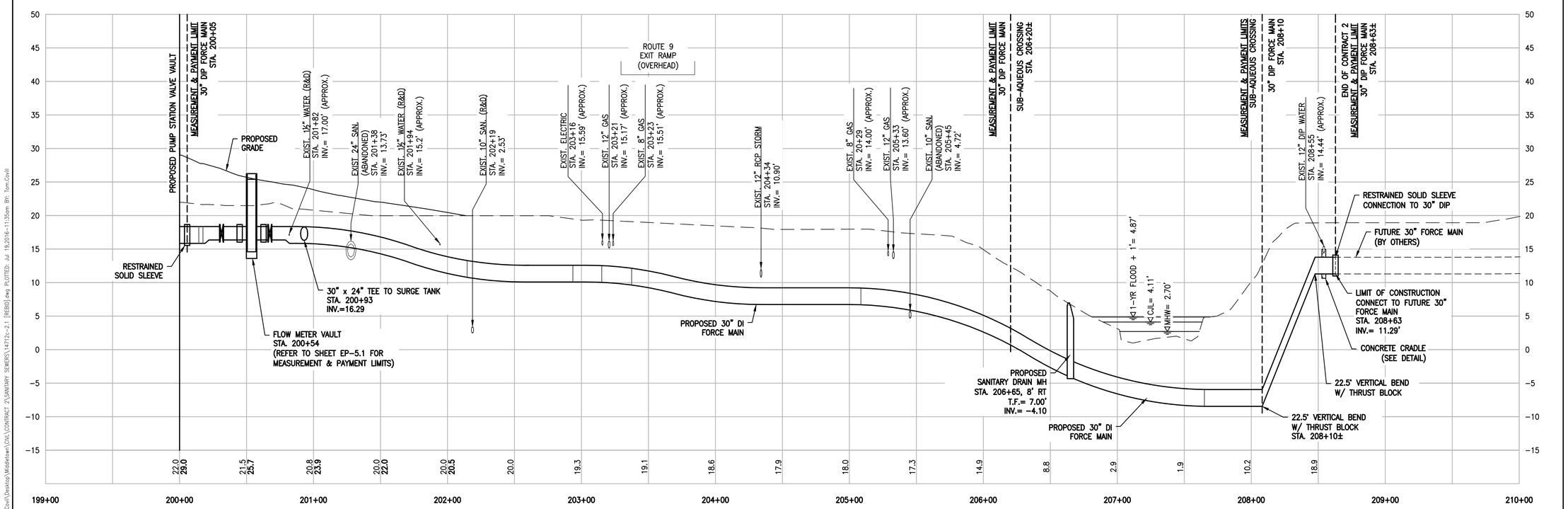

HOR. SCALE IN FEET 0 40 80

VER. SCALE IN FEET 0 8 16

CDR MAGUIRE

2080 Silas Deane Highway
Rocky Hill, Connecticut
TEL. (860) 563-3158
www.cdrmaguire.com

REVISIONS

Number	Description	Date
1	ADDRESS DEEP REVIEW	5/6/2016
2	BID ADDENDUM 2	7/19/2016

FRANCIS T. PATNAUDE INTER-MUNICIPAL PUMPING STATION

MIDDLETOWN, CT

30" FORCE MAIN PLAN □ PROFILE

PROJECT NUMBER: 14712

DESIGNED BY: TJC

DRAWN BY: TJC

DATE: FEBRUARY 23, 2016

SHEET NUMBER:

C-2.1

DRAWING FILE: C:\Users\TCovil\Desktop\Middletown\DWG\CONTRACT 2\SANITARY SEWERS\14712c-2.1 [REBID].dwg PLOTTED: Jul 19,2016-11:35am BY: Tom Covill

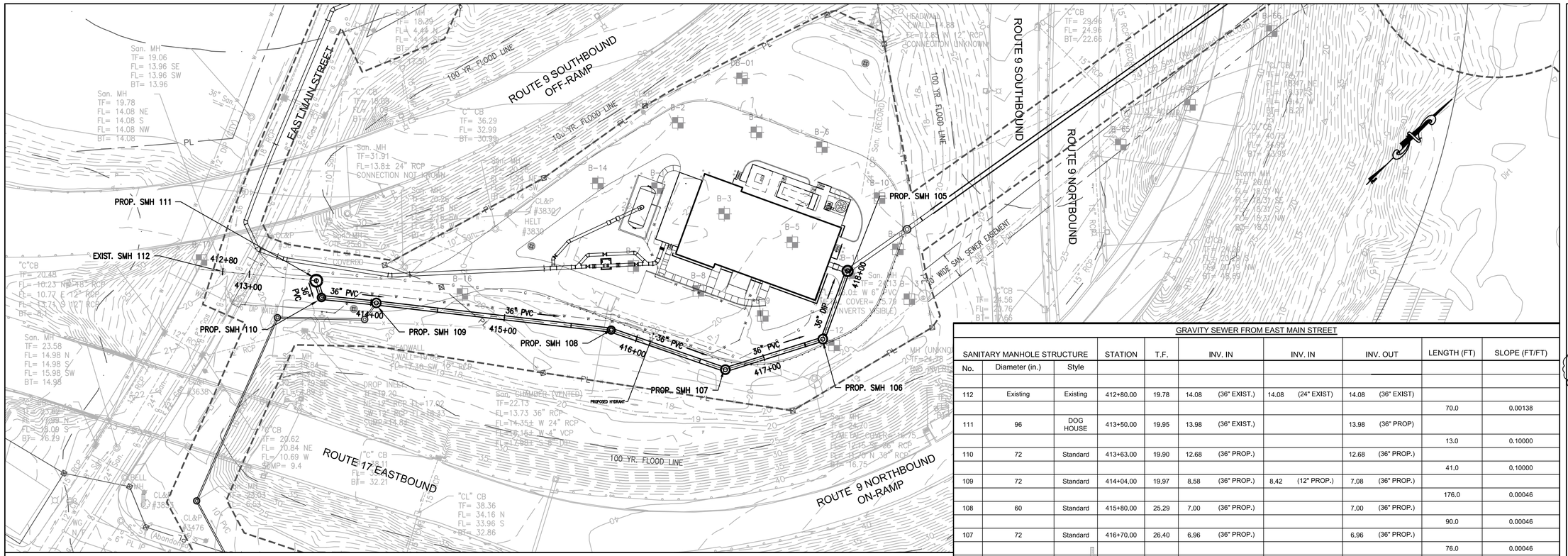

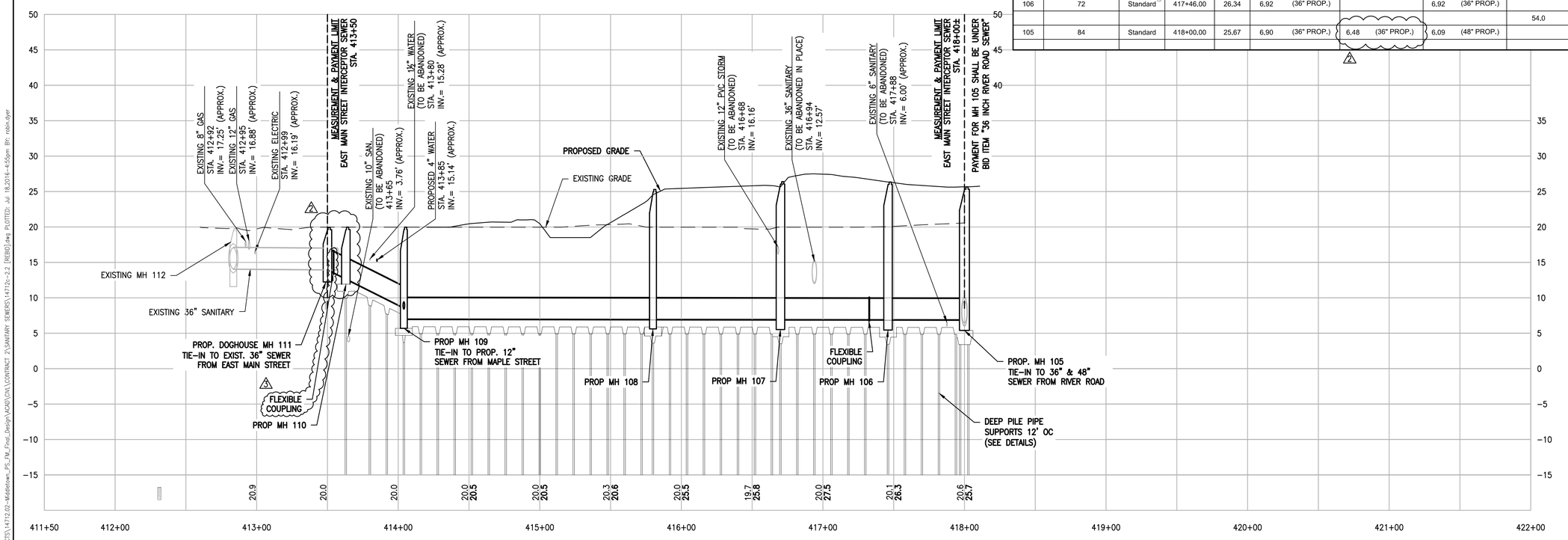

HOR. SCALE IN FEET 0 40 80

VER. SCALE IN FEET 0 8 16

GRAVITY SEWER FROM EAST MAIN STREET

SANITARY MANHOLE STRUCTURE			STATION	T.F.	INV. IN		INV. IN		INV. OUT		LENGTH (FT)	SLOPE (FT/FT)
No.	Diameter (in.)	Style										
112	Existing	Existing	412+80.00	19.78	14.08	(36" EXIST.)	14.08	(24" EXIST)	14.08	(36" EXIST)		
											70.0	0.00138
111	96	DOG HOUSE	413+50.00	19.95	13.98	(36" EXIST.)			13.98	(36" PROP)		
											13.0	0.10000
110	72	Standard	413+63.00	19.90	12.68	(36" PROP.)			12.68	(36" PROP.)		
											41.0	0.10000
109	72	Standard	414+04.00	19.97	8.58	(36" PROP.)	8.42	(12" PROP.)	7.08	(36" PROP.)		
											176.0	0.00046
108	60	Standard	415+80.00	25.29	7.00	(36" PROP.)			7.00	(36" PROP.)		
											90.0	0.00046
107	72	Standard	416+70.00	26.40	6.96	(36" PROP.)			6.96	(36" PROP.)		
											76.0	0.00046
106	72	Standard	417+46.00	26.34	6.92	(36" PROP.)			6.92	(36" PROP.)		
											54.0	0.00046
105	84	Standard	418+00.00	25.67	6.90	(36" PROP.)	6.48	(36" PROP.)	6.09	(48" PROP.)		

CDR MAGUIRE
2080 Silas Deane Highway
Rocky Hill, Connecticut
TEL. (860) 563-3158
www.cdrmaguire.com

REVISIONS

Number	Description	Date
1	ADDRESS DEEP REVIEW	5/6/2016
2	BID ADDENDUM 1	7/11/2016
3	BID ADDENDUM 2	7/19/2016

FRANCIS T. PATNAUDE INTER-MUNICIPAL PUMPING STATION

MIDDLETOWN, CT

36" EAST MAIN STREET SEWER PLAN ▯ PROFILE

PROJECT NUMBER: 14712

DESIGNED BY: TJC

DRAWN BY: TJC

DATE: FEBRUARY 23, 2016

SHEET NUMBER:

C-2.2

DRAWING FILE: G:\PROJECTS\14712.00-Middletown_PS_EM_Final_Design\ACAD\CIVIL\CONTRACT 2\SANITARY SEWERS\14712c-2.2 [REF80].dwg PLOTTED: Jul 18,2016-4:55pm BY: robin.dyer

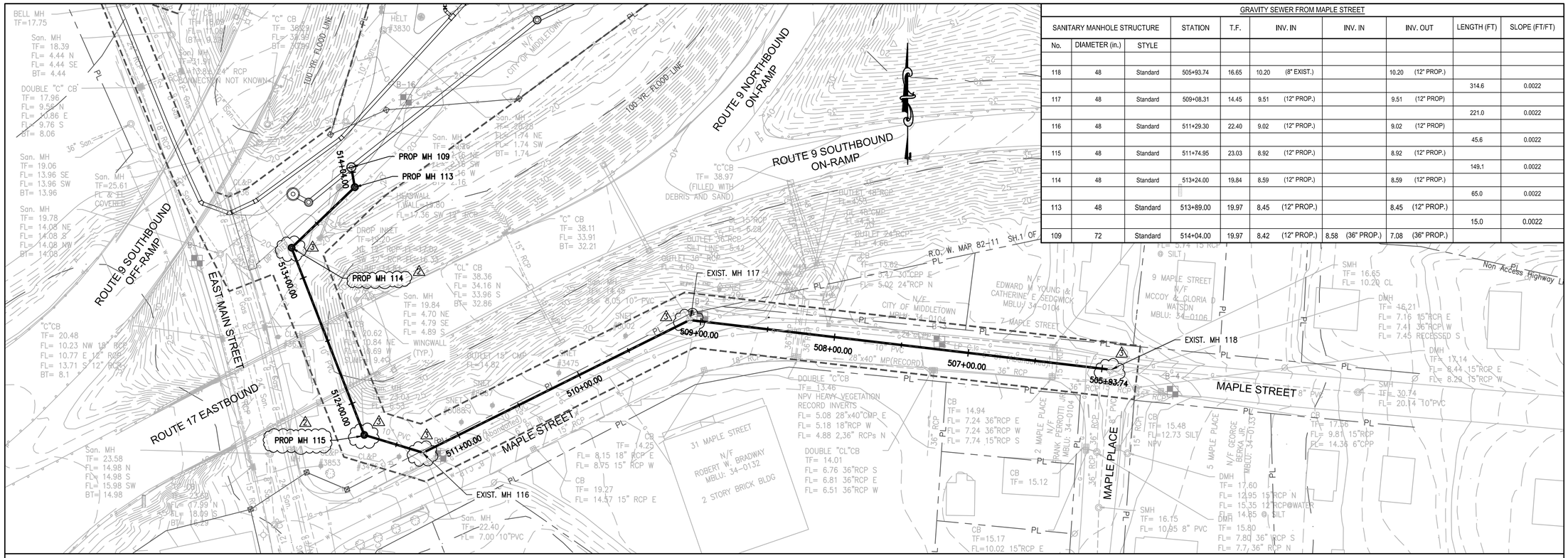

GRAVITY SEWER FROM MAPLE STREET

SANITARY MANHOLE STRUCTURE			STATION	T.F.	INV. IN	INV. IN	INV. OUT	LENGTH (FT)	SLOPE (FT/FT)
No.	DIAMETER (in.)	STYLE							
118	48	Standard	505+93.74	16.65	10.20 (8" EXIST.)		10.20 (12" PROP.)		
								314.6	0.0022
117	48	Standard	509+08.31	14.45	9.51 (12" PROP.)		9.51 (12" PROP)		
								221.0	0.0022
116	48	Standard	511+29.30	22.40	9.02 (12" PROP.)		9.02 (12" PROP)		
								45.6	0.0022
115	48	Standard	511+74.95	23.03	8.92 (12" PROP.)		8.92 (12" PROP.)		
								149.1	0.0022
114	48	Standard	513+24.00	19.84	8.59 (12" PROP.)		8.59 (12" PROP.)		
								65.0	0.0022
113	48	Standard	513+89.00	19.97	8.45 (12" PROP.)		8.45 (12" PROP.)		
								15.0	0.0022
109	72	Standard	514+04.00	19.97	8.42 (12" PROP.)	8.58 (36" PROP.)	7.08 (36" PROP.)		

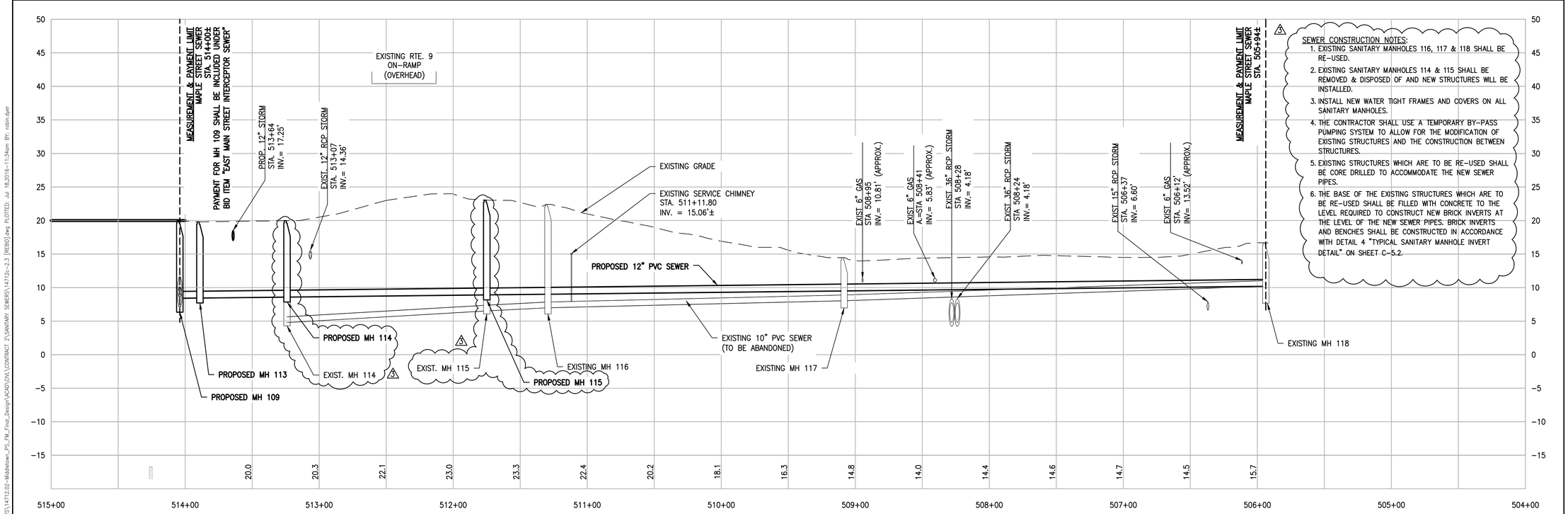

SEWER CONSTRUCTION NOTES:

1. EXISTING SANITARY MANHOLES 116, 117 & 118 SHALL BE RE-USED.
2. EXISTING SANITARY MANHOLES 114 & 115 SHALL BE REMOVED & DISPOSED OF AND NEW STRUCTURES WILL BE INSTALLED.
3. INSTALL NEW WATER TIGHT FRAMES AND COVERS ON ALL SANITARY MANHOLES.
4. THE CONTRACTOR SHALL USE A TEMPORARY BY-PASS PUMPING SYSTEM TO ALLOW FOR THE MODIFICATION OF EXISTING STRUCTURES AND THE CONSTRUCTION BETWEEN STRUCTURES.
5. EXISTING STRUCTURES WHICH ARE TO BE RE-USED SHALL BE CORE DRILLED TO ACCOMMODATE THE NEW SEWER PIPES.
6. THE BASE OF THE EXISTING STRUCTURES WHICH ARE TO BE RE-USED SHALL BE FILLED WITH CONCRETE TO THE LEVEL REQUIRED TO CONSTRUCT NEW BRICK INVERTS AT THE LEVEL OF THE NEW SEWER PIPES. BRICK INVERTS AND BENCHES SHALL BE CONSTRUCTED IN ACCORDANCE WITH DETAIL 4 "TYPICAL SANITARY MANHOLE INVERT DETAIL" ON SHEET C-5.2.

NOTE: DETAILS ON CL&P POLE 3476 AND SNET POLES 8088, 8087, 3475, AND 8002 AND DUCT BANKS ARE NOT AVAILABLE.

HOR. SCALE IN FEET 0 40 80

VER. SCALE IN FEET 0 8 16

CDR MAGUIRE

2080 Silas Deane Highway
Rocky Hill, Connecticut
TEL. (860) 563-3158
www.cdrmaguire.com

REVISIONS

Number	Description	Date
1	ADDRESS DEEP REVIEW	5/6/2016
2	BID ADDENDUM 1	7/11/2016
3	BID ADDENDUM 2	7/19/2016

FRANCIS T. PATNAUDE INTER-MUNICIPAL PUMPING STATION

MIDDLETOWN, CT

12" MAPLE STREET SEWER PLAN & PROFILE

PROJECT NUMBER: 14712

DESIGNED BY: TJC

DRAWN BY: TJC

DATE: FEBRUARY 23, 2016

SHEET NUMBER:

C-2.3

DRAWING FILE: G:\PROJECTS\14712.02-Middletown_PS_FM_Final_Design\ACAD\CIVIL\CONTRACT 2\SANITARY SEWERS\14712c-2.3 [REBID].dwg PLOTTED: Jul 18,2016-11:34am BY: robin.dyer

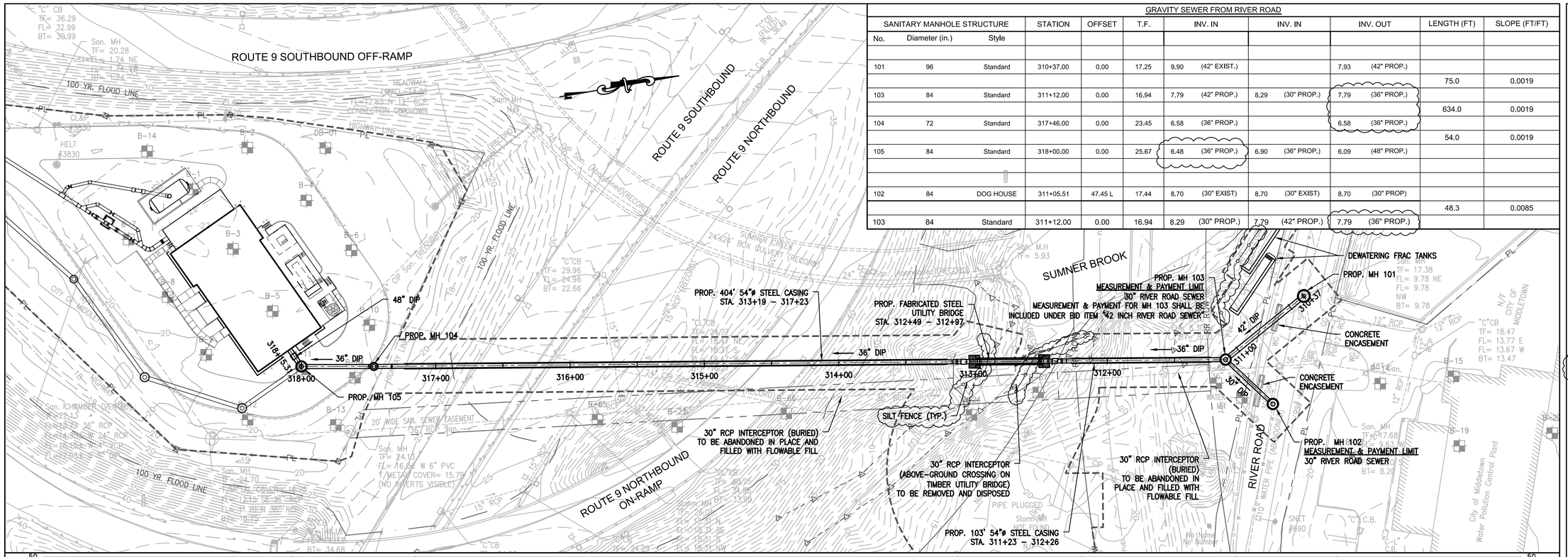

GRAVITY SEWER FROM RIVER ROAD

SANITARY MANHOLE STRUCTURE			STATION	OFFSET	T.F.	INV. IN		INV. IN		INV. OUT		LENGTH (FT)	SLOPE (FT/FT)
No.	Diameter (in.)	Style											
101	96	Standard	310+37.00	0.00	17.25	9.90	(42" EXIST.)			7.93	(42" PROP.)		
												75.0	0.0019
103	84	Standard	311+12.00	0.00	16.94	7.79	(42" PROP.)	8.29	(30" PROP.)	7.79	(36" PROP.)		
												634.0	0.0019
104	72	Standard	317+46.00	0.00	23.45	6.58	(36" PROP.)			6.58	(36" PROP.)		
												54.0	0.0019
105	84	Standard	318+00.00	0.00	25.67	6.48	(36" PROP.)	6.90	(36" PROP.)	6.09	(48" PROP.)		
102	84	DOG HOUSE	311+05.51	47.45 L	17.44	8.70	(30" EXIST)	8.70	(30" EXIST)	8.70	(30" PROP)		
												48.3	0.0085
103	84	Standard	311+12.00	0.00	16.94	8.29	(30" PROP.)	7.79	(42" PROP.)	7.79	(36" PROP.)		

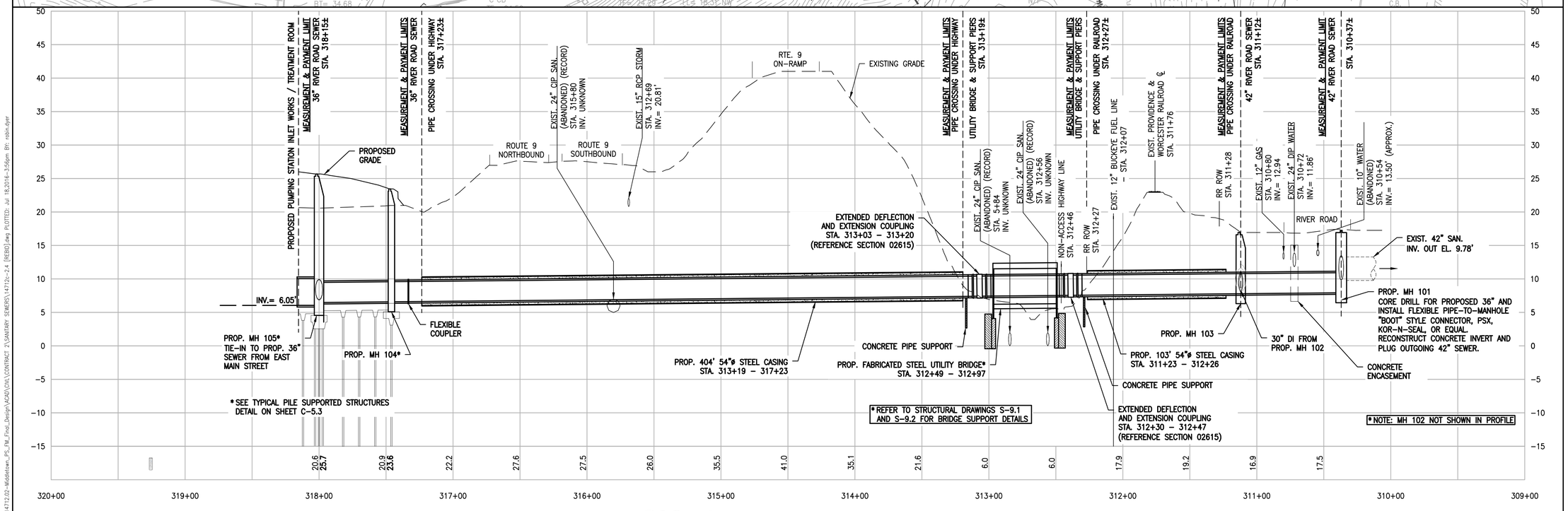

NOTE:
THE ABOVE GROUND PIPE BRIDGE, TIMBER CRADLING AND 36-INCH RCP SEWER INTERCEPTOR PIPE SHALL BE DISPOSED OF AS TYPICAL CONSTRUCTION DEBRIS.

SEWER ABANDONMENT NOTES:
1. THE 24 INCH CIP DOES NOT REQUIRE FURTHER ABANDONMENT. THESE PIPES ARE SHOWN FOR REFERENCE ONLY.
2. THE SECTION OF 36 INCH AND 42 INCH SEWER ON RIVER ROAD THAT ARE BEING CUT OF AND ABANDONED TO INSTALL THE PROPOSED 36 INCH DI INTERCEPTOR SEWER SHALL BE FILLED WITH FLOWABLE FILL.
3. THE 48 INCH SEWER SHALL BE ABANDONED IN PLACE.
4. THE ABOVE GRADE SECTION OF 36 INCH RCP INTERCEPTOR SHALL BE REMOVED AND DISPOSED.
5. THE BELOW GROUND SECTION OF 30 INCH RCP INTERCEPTOR SEWER SHALL BE FILLED WITH FLOWABLE FILL TO THE SANITARY CHAMBER.

HOR. SCALE IN FEET 0 40 80
VER. SCALE IN FEET 0 8 16

CDR MAGUIRE
2080 Silas Deane Highway
Rocky Hill, Connecticut
TEL. (860) 563-3158
www.cdrmaguire.com

REVISIONS

Number	Description	Date
1	ADDRESS DEEP REVIEW	5/6/2016
2	BID ADDENDUM 2	7/19/2016

FRANCIS T. PATNAUDE INTER-MUNICIPAL PUMPING STATION

MIDDLETOWN, CT

36" RIVER ROAD SEWER PLAN & PROFILE

PROJECT NUMBER: 14712
DESIGNED BY: TJC
DRAWN BY: TJC
DATE: FEBRUARY 23, 2016

SHEET NUMBER:

C-2.4

DRAWING FILE: G:\PROJECTS\14712.00-Middletown_PS_EM_Final_Design\ACAD\CIVIL\CONTRACT 2\SANITARY SEWERS\14712-2.4 [REBID].dwg PLOTTED: Jul 18,2016-3:56pm BY: robin.dyer

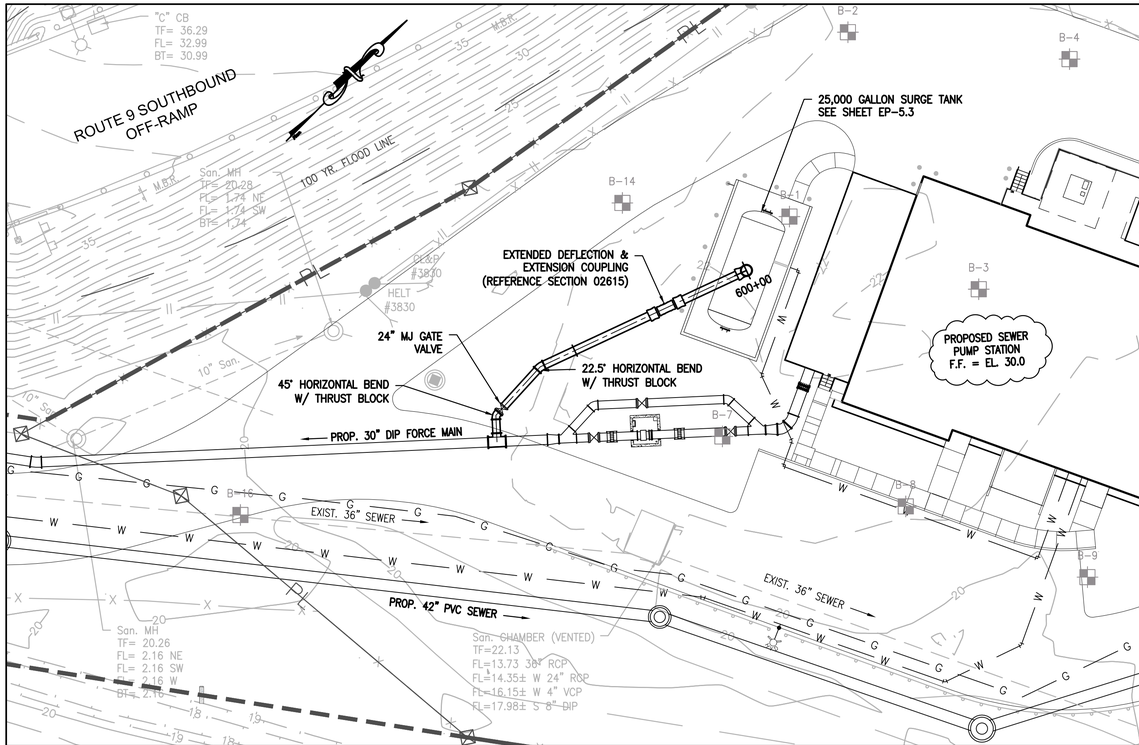

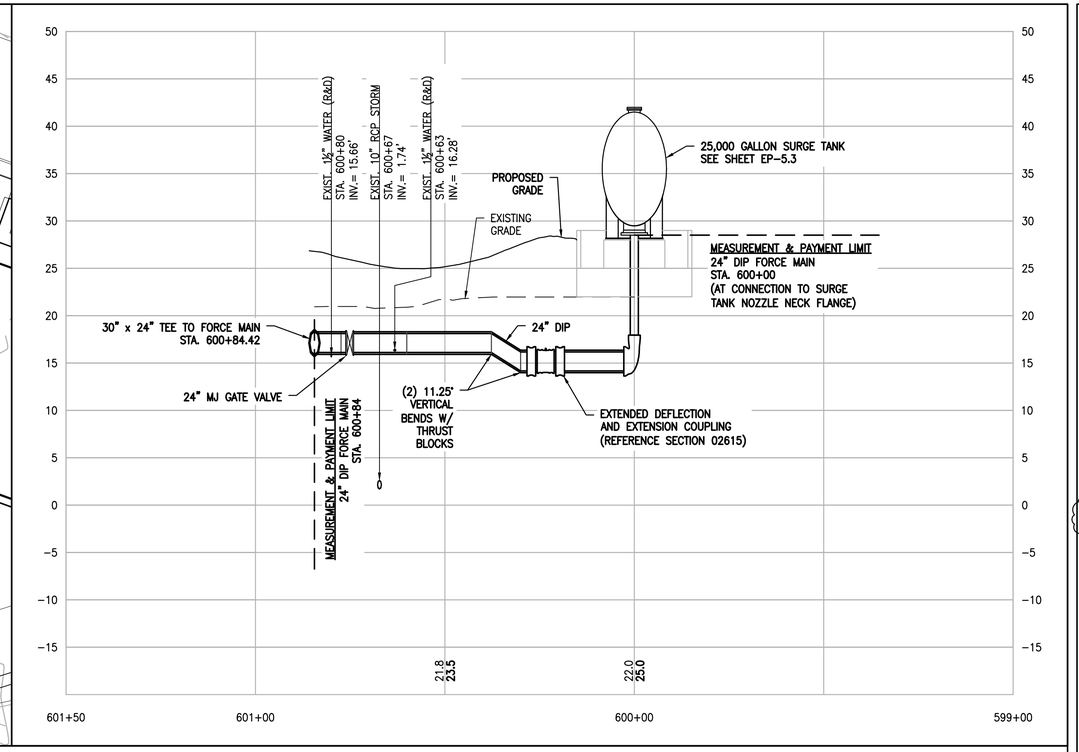

HOR. SCALE IN FEET 0 20 40

VER. SCALE IN FEET 0 8 16

CDR MAGUIRE
2080 Silas Deane Highway
Rocky Hill, Connecticut
TEL. (860) 563-3158
www.cdrmaguire.com

REVISIONS

Number	Description	Date
1	ADDRESS DEEP REVIEW	5/6/2016
2	BID ADDENDUM 2	7/19/2016

FRANCIS T.
PATNAUDE
INTER-MUNICIPAL
PUMPING STATION

MIDDLETOWN, CT

24" SURGE TAN
CONNECTION TO
FORCE MAIN
PLAN & PROFILE

PROJECT NUMBER: 14712

DESIGNED BY: TJC

DRAWN BY: TJC

DATE: FEBRUARY 23, 2016

SHEET NUMBER:

C-2.5

DRAWING FILE: G:\PROJECTS\14712.02-Middletown_PS_FM_Final_Design\ACAD\CIVIL\CONTRACT 2\SANITARY SEWERS\14712-2.5 [FEEBS].dwg PLOTTED: Jul 18,2016-12:35pm BY: robin.dyer

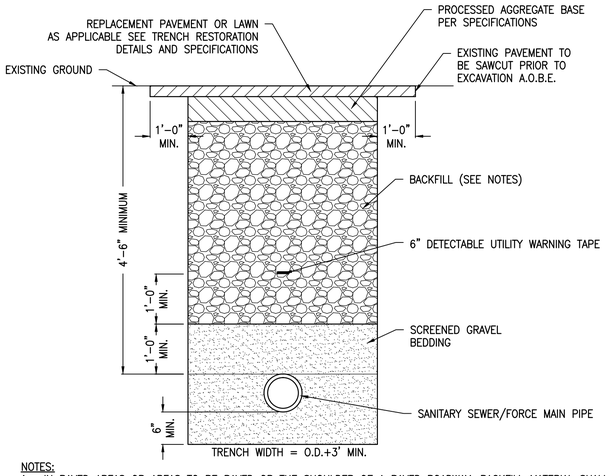

NOTES:

1. IN PAVED AREAS OR AREAS TO BE PAVED OR THE SHOULDER OF A PAVED ROADWAY, BACKFILL MATERIAL SHALL BE BANK-RUN GRAVEL M.02.06 GRADATION C, FORM 816, AS APPROVED BY THE ENGINEER. PROCESSED AGGREGATE CAN BE USED IN LIEU OF BANK-RUN GRAVEL. IN ALL OTHER AREAS, SUITABLE EXCAVATED MATERIAL MAY BE RE-USED IF APPROVED BY THE ENGINEER.
2. SCREENED GRAVEL BEDDING SHALL BE WRAPPED IN GEOTEXTILE FABRIC (12" MIN. OVERLAP)

1 / C-5.3 TYPICAL SANITARY SEWER/FORCE MAIN TRENCH CROSS-SECTION
N.T.S.

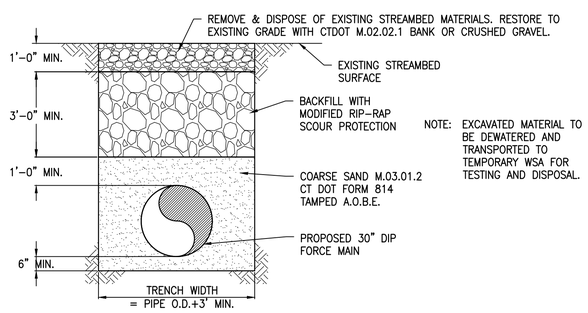

2 / C-5.3 FORCE MAIN TRENCH EXCAVATION FOR SUB-AQUEOUS CROSSINGS
N.T.S.

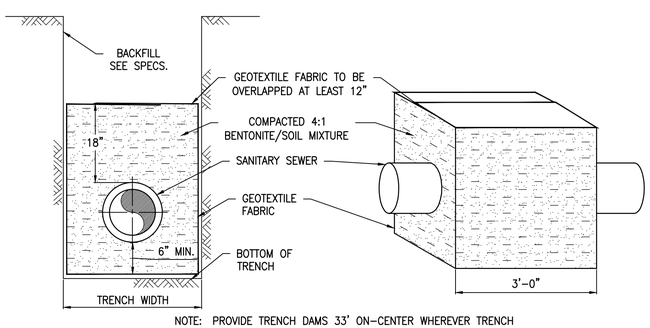

NOTE: PROVIDE TRENCH DAMS 33' ON-CENTER WHEREVER TRENCH GRADE IS 8% AND GREATER

3 / C-5.3 TYPICAL TRENCH DAM
N.T.S.

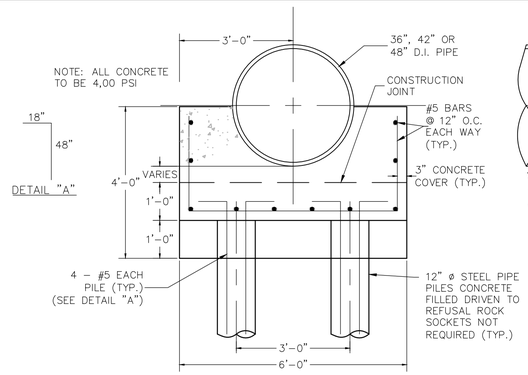

TRANSVERSE SECTION

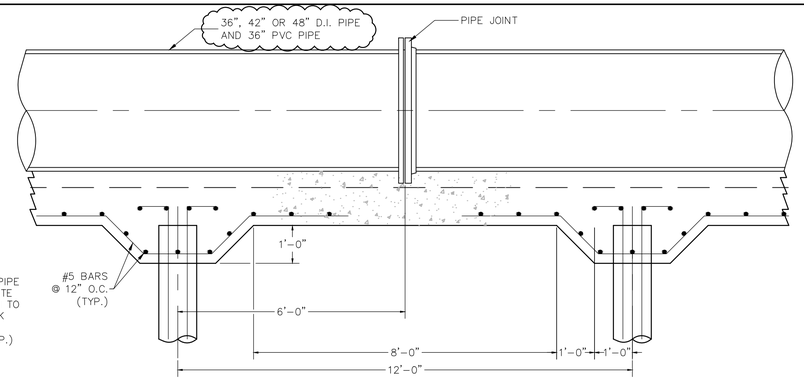

LONGITUDINAL SECTION

5 / C-5.3 TYPICAL PILE SUPPORTED PIPES
N.T.S.

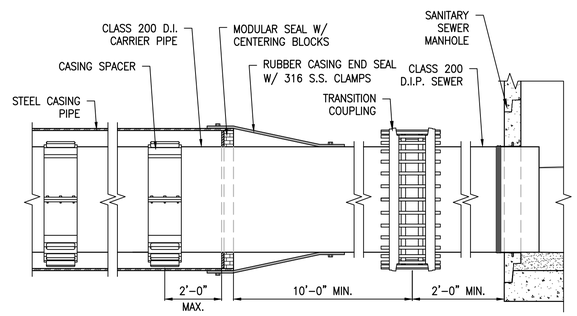

END SEAL □ SPACING

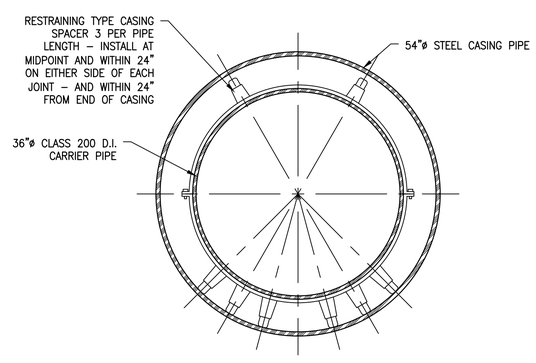

TYPICAL SECTION

4 / C-5.3 CASING PIPE DETAIL
N.T.S.

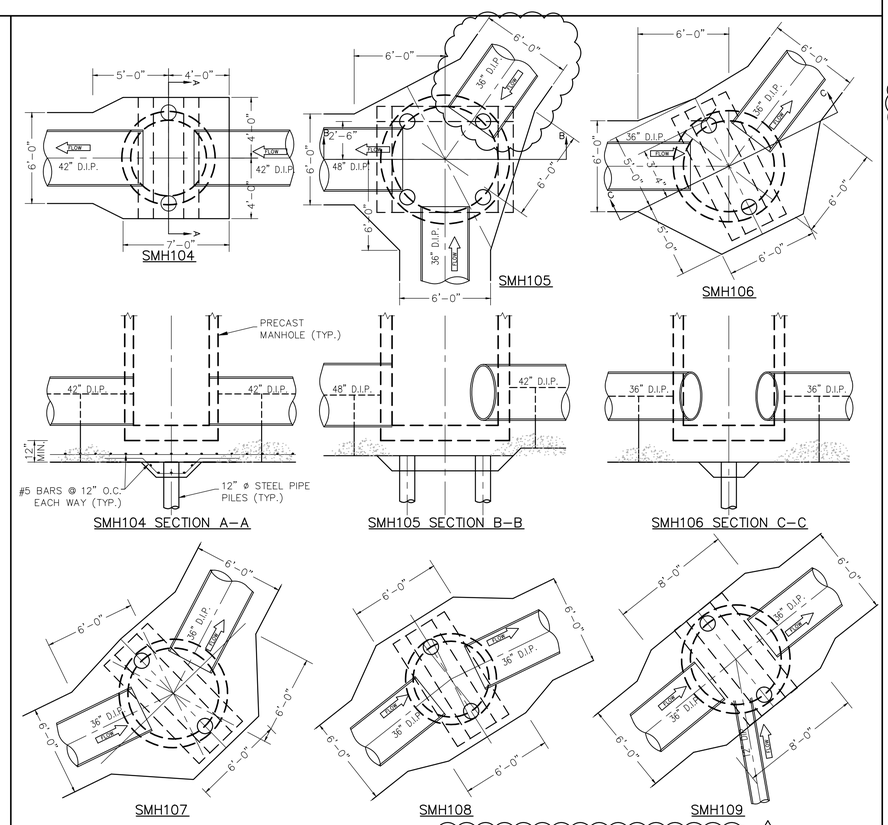

NOTE: ALL CONCRETE SHALL BE 4,000 PSI

6 / C-5.3 TYPICAL PILE SUPPORTED STRUCTURES
N.T.S.

CDR MAGUIRE
2080 Silas Deane Highway
Rocky Hill, Connecticut
TEL. (860) 563-3158
www.cdrmaguire.com

REVISIONS

Number	Description	Date
1	ADDRESS DEEP REVIEW	5/6/2016
2	BID ADDENDUM 1	7/11/2016
3	BID ADDENDUM 2	7/19/2016

FRANCIS T. PATNAUDE INTER-MUNICIPAL PUMPING STATION

MIDDLETOWN, CT

SEWER □ FORCE MAIN DETAILS II

PROJECT NUMBER: 14712
DESIGNED BY: -
DRAWN BY: TJC
DATE: FEBRUARY 23, 2016

SHEET NUMBER:

C-5.3

DRAWING FILE: C:\Users\TJcoy\Desktop\Middletown\CIVIL\CONTRACT 2\DETAILS\14712C-5.3 (BID).dwg PLOTTED: Jul 19,2016-11:45am BY: Tom.Coyle

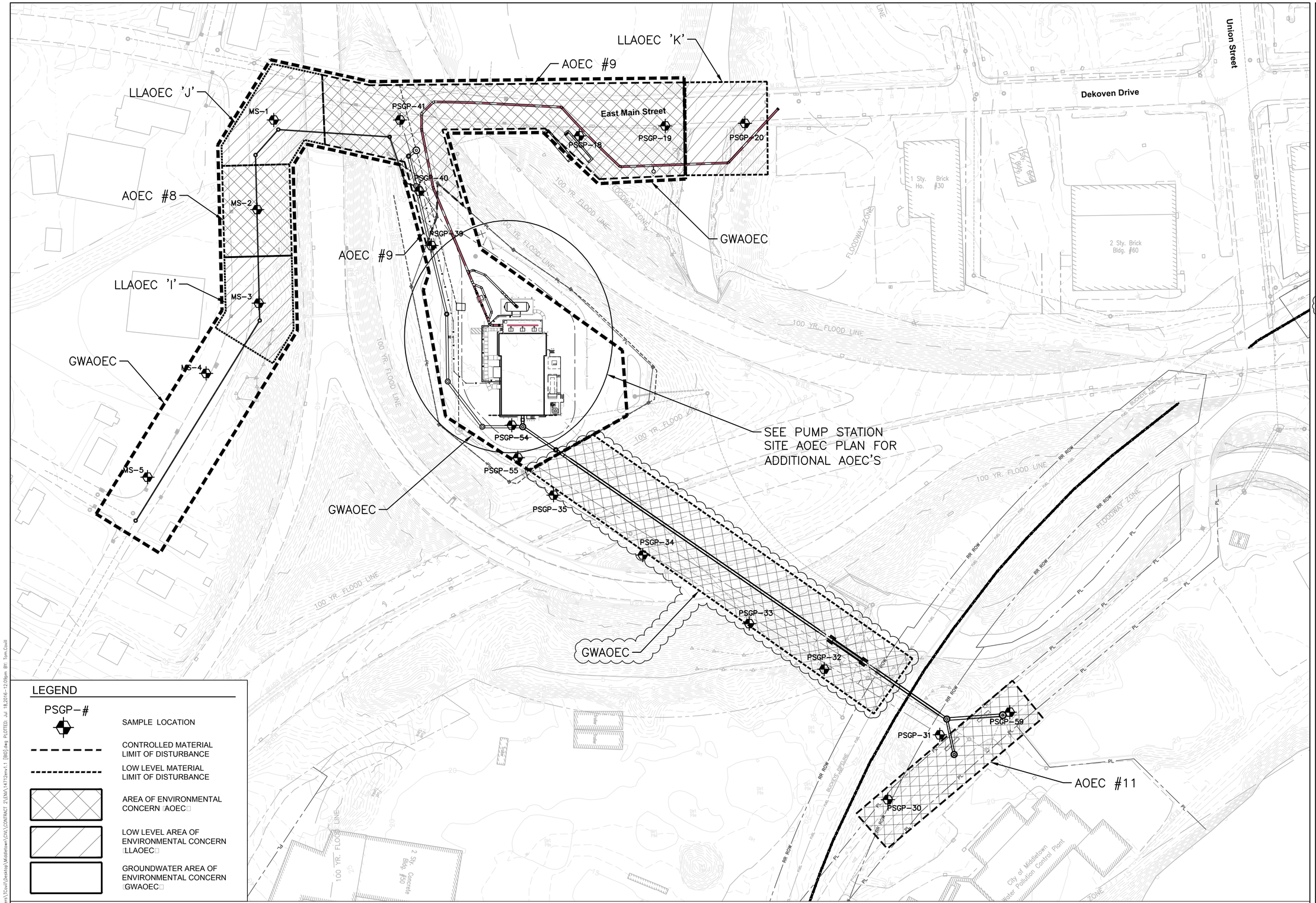

CDR MAGUIRE
2080 Silas Deane Highway
Rocky Hill, Connecticut
TEL. (860) 563-3158
www.cdrmaguire.com

REVISIONS

Number	Description	Date
1	ADDRESS DEEP REVIEW	5/6/2016
2	BID ADDENDUM 2	7/19/2016

FRANCIS T. PATNAUDE INTER-MUNICIPAL PUMPING STATION

MIDDLETOWN, CT

GRAVITY SEWER
FORCE MAIN
AREAS OF ENVIRONMENTAL CONCERN PLAN

PROJECT NUMBER: 14712
DESIGNED BY: DRS
DRAWN BY: CAD
DATE: FEBRUARY 23, 2016

SHEET NUMBER:

ENV-1.1

DRAWING FILE: C:\Users\Tom\Desktop\Middletown\CIVIL\CONTRACT 2\ENV\14712-ev1.1 [Bill].dwg PLOTTED: Jul 18,2016 - 12:09pm BY: Tom.Covill

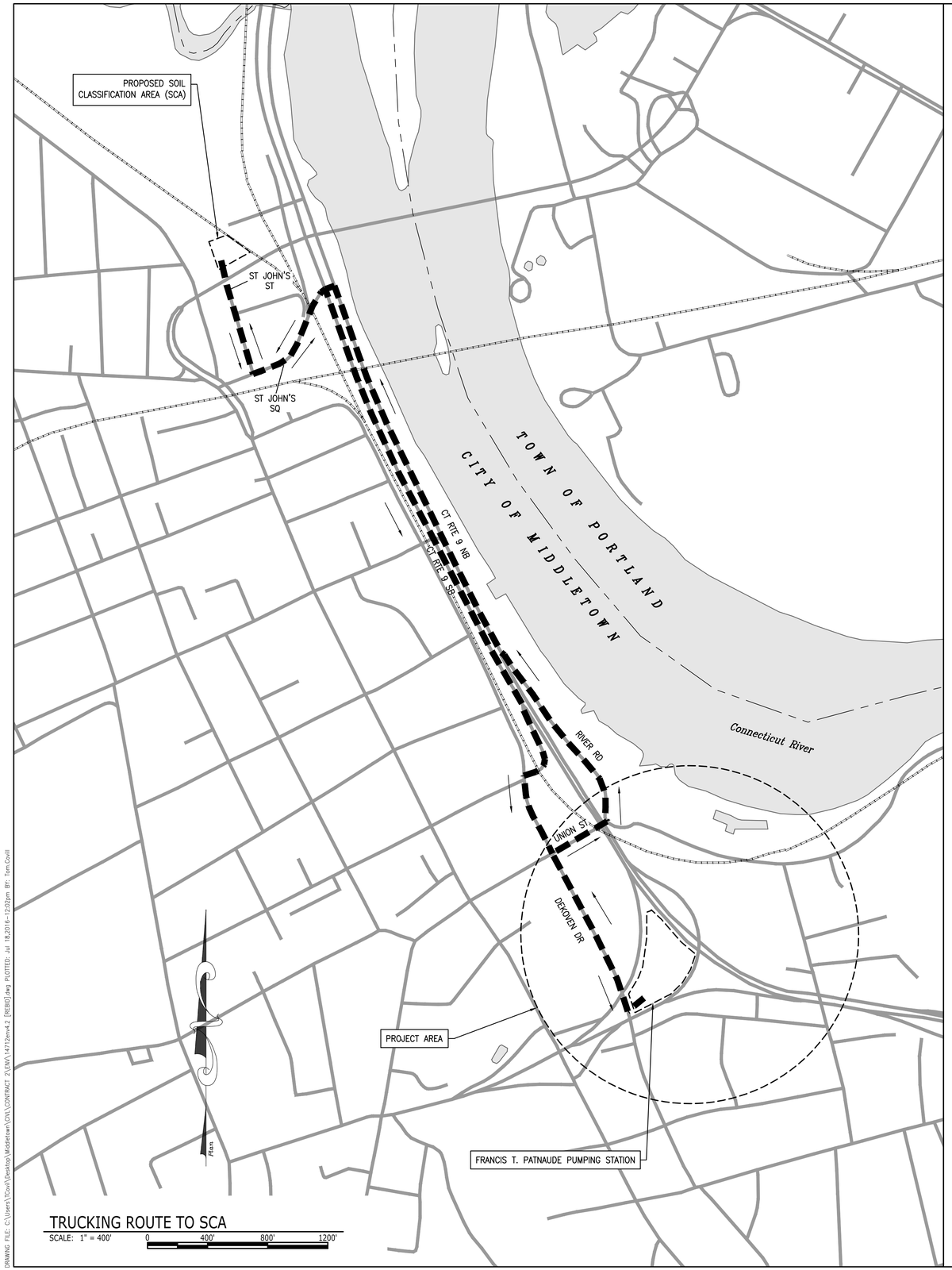

SOIL CLASSIFICATION AREA (SCA)

SCALE: 1" = 50' 0 50' 100' 150'

CDR MAGUIRE
2080 Silas Deane Highway
Rocky Hill, Connecticut
TEL. (860) 563-3158
www.cdrmaguire.com

REVISIONS

Number	Description	Date
1	ADDRESS DEEP REVIEW	5/6/2016
2	BID ADDENDUM 2	7/19/2016

FRANCIS T. PATNAUDE INTER-MUNICIPAL PUMPING STATION

MIDDLETOWN, CT

SOIL CLASSIFICATION AREA AND TRUC□ING ROUTE

PROJECT NUMBER: 14712

DESIGNED BY: -

DRAWN BY: TJC

DATE: FEBRUARY 23, 2016

SHEET NUMBER:

ENV-4.2

DRAWING FILE: C:\Users\TCovi\Desktop\Middletown\CIVIL\CONTRACT 2\ENV\14712env4.2 [REBB].dwg PLOTTED: Jul 18,2016 - 12:02pm BY: Tom.Covil

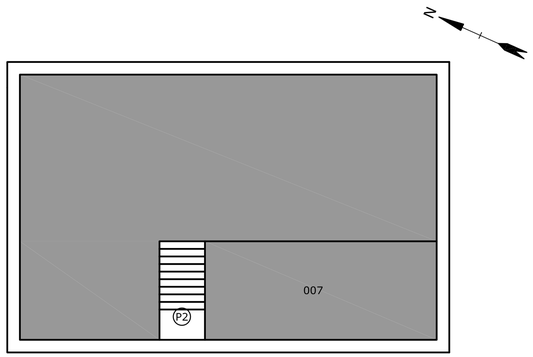

PUMP BUILDING
SECOND FLOOR

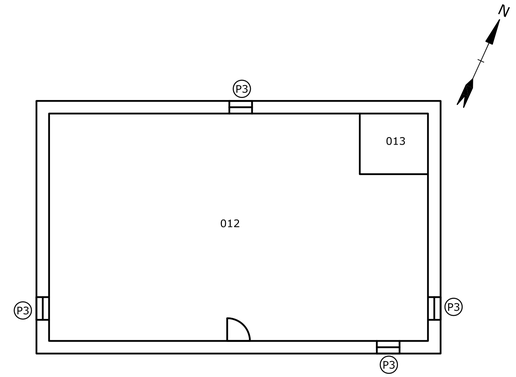

INCINERATOR BUILDING
FIRST FLOOR

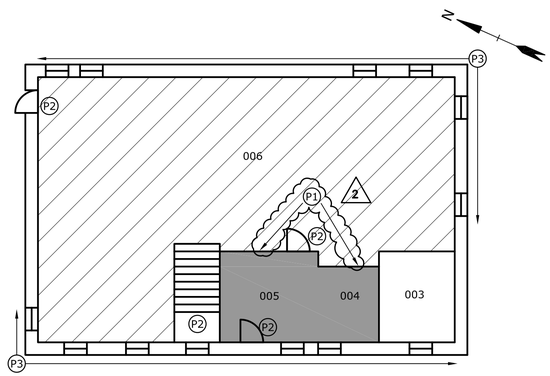

PUMP BUILDING
FIRST FLOOR

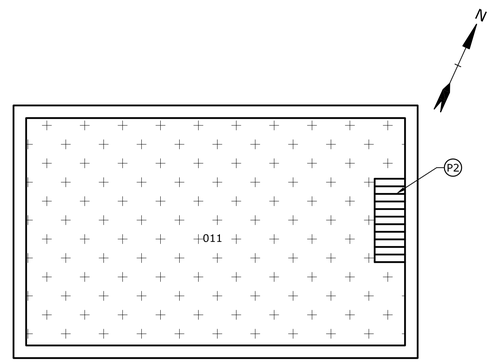

INCINERATOR BUILDING
BASEMENT

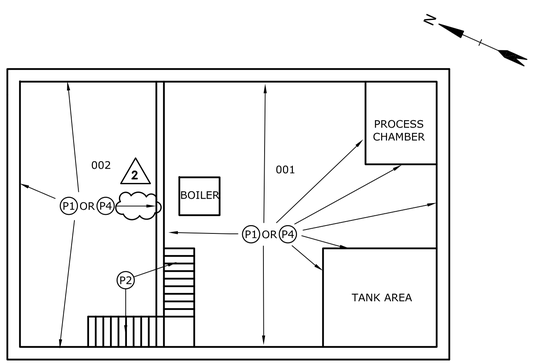

PUMP BUILDING
BASEMENT

GENERAL NOTES:

1. THE DRAWING IS INTENDED TO REPRESENT GENERAL LOCATIONS OF PCB CONTAMINATED BUILDING MATERIALS ONLY. FOR ESTIMATES OF QUANTITIES, REFER TO PCB ABATEMENT SPECIFICATION 02085. THE CONTRACTOR MUST FIELD VERIFY THE QUANTITIES OF MATERIALS BEFORE SUBMITTING THE BID.

2. PAINTS ASSOCIATED WITH SOME BUILDING COMPONENTS WERE FOUND TO CONTAIN LEAD. REFER TO SECTION 02090 - LEAD PAINT AWARENESS, AS WELL AS DRAWING HBM1.1.

3. LOCATIONS/DESCRIPTIONS OF OBSERVED HAZARDOUS BUILDING AND UNDERGROUND MATERIALS REFLECT THOSE FOUND IN THE PRE-DEMOLITION HAZARDOUS BUILDING MATERIALS INSPECTION REPORT BY EAGLE ENVIRONMENTAL DATED MAY 2, 2013 AND THE SUPPLEMENTAL HAZARDOUS BUILDING MATERIALS ASSESSMENT REPORT BY TIGHE&BOND DATED FEBRUARY 25, 2016.

4. WINDOWS TO BE REMOVED INTACT AS EXTERIOR ABATEMENT PRIOR TO BUILDING DEMOLITION ACTIVITIES. WINDOWS ALSO CONTAIN ASBESTOS CAULKING AND GLAZING. REFER TO SECTION 02080 - ASBESTOS ABATEMENT AS WELL AS DRAWINGS HBM 1.2.

5. CONCRETE SUBSTRATES CONTAINING PCB PAINT TO BE REMOVED UNDER A DEMO-SEGREGATE SCENARIO AT THE DURING BUILDING DEMOLITION ACTIVITIES.

6. PORTIONS OF THE PUMP BUILDING BASEMENT WALLS MAY REMAIN IN PLACE. ABATEMENT CONTRACTOR TO COORDINATE WITH GENERAL CONTRACTOR TO DETERMINE WHICH WALLS, PORTIONS OF WALLS, PROCESS CHAMBERS, OR TANK AREAS ARE TO REMAIN IN PLACE. ABATEMENT CONTRACTOR, WILL REMOVE PCB CONTAINING PAINT (VIA SCARIFICATION/GRINDING) FROM WALLS, PROCESS CHAMBERS, OR TANK AREAS TO REMAIN.

2 7. THE CONTRACTOR SHALL BE RESPONSIBLE FOR DETERMINING WHICH WALLS MUST BE LEFT IN PLACE AS PART OF HIS SHEETING AND SHORING PLAN. SECTION 02080 AND THE HBM DRAWINGS ALLOW FOR THIS BY PROVIDING THE CONTRACTOR WITH OPTIONS FOR ABATING WALLS TO BE LEFT IN PLACE VERSUS FULLY REMOVED (BID ITEMS 34 AND 35).

PCB ABATEMENT KEY

PCB = POLYCHLORINATED BIPHENYL
PPM = PARTS PER MILLION
CMU = CONCRETE MASONRY UNIT

P1 REMOVE AND DISPOSE OF WHITE PAINTED INTERIOR CONCRETE AND CMU WALLS AND CEILINGS AS CT REGULATED PCB WASTE <50 PPM.

P2 REMOVE AND DISPOSE OF ALL PAINTED DOORS, DOOR FRAMES, AND STAIR SYSTEMS INCLUDING BUT NOT LIMITED TO THE STRINGERS, CARRIAGE, BRACKETS, RISERS, BLOCKING, STEPS, AND HANDRAILS AS CT REGULATED PCB WASTE <50PPM.

P3 REMOVE AND DISPOSE OF ALL WINDOW SYSTEMS INCLUDING BUT NOT LIMITED TO SASHES, CASINGS, SILLS, JAMBS, MUNTINS, AND HARDWARE AS CT REGULATED PCB WASTE <50 PPM.

P4 REMOVE AND DISPOSE OF PCB CONTAINING WHITE PAINT FROM BASEMENT WALLS SLATED TO REMAIN IN PLACE. REMOVAL TO BE CONDUCTED VIA SCARIFICATION/GRINDING USING FULL-CONTAINMENT PROCEDURES.

REMOVE AND DISPOSE OF ALL RED PAINTED CONCRETE FLOORS AS CT REGULATED PCB WASTE <50 PPM.

REMOVE AND DISPOSE OF PAINTSED PLASTER CEILING AS CT REGULATED PCB WASTE <50 PPM.

REMOVE AND DISPOSE OF PAINTED CONCRETE CEILING AS CT REGULATED PCB WASTE <50 PPM.

NOTE:

REMOVE AND DISPOSE OF ALL STRUCTURAL STEEL WITH PCB PAINT/PRIMER THROUGHOUT THE BUILDING AS CT REGULATED PCB WASTE <50 PPM.

NOT TO SCALE

CDR MAGUIRE
2080 Silas Deane Highway
Rocky Hill, Connecticut
TEL. (860) 563-3158
www.cdrmaguire.com

Tighe&Bond
Consulting Engineers
www.tighebond.com

REVISIONS

Number	Description	Date
1	ADDRESS DEEP REVIEW	5/6/2016
2	BID ADDENDUM 2	7/12/2016

FRANCIS T. PATNAUDE
INTER-MUNICIPAL PUMPING STATION

MIDDLETOWN, CT

PUMP&INCINERATOR BUILDING PCB ABATEMENT

PROJECT NUMBER: 14712
DESIGNED BY: AJV
DRAWN BY: CSL
DATE: FEBRUARY 23, 2016

SHEET NUMBER:

HBM-1.3

DRAWING FILE: J:\M\M1325 Maguire_Middletown\Drawings\SHEETS\M-1325-4-HBM full dwg.dwg PLOTTED: Jul 12,2016-3:26pm BY: tmp

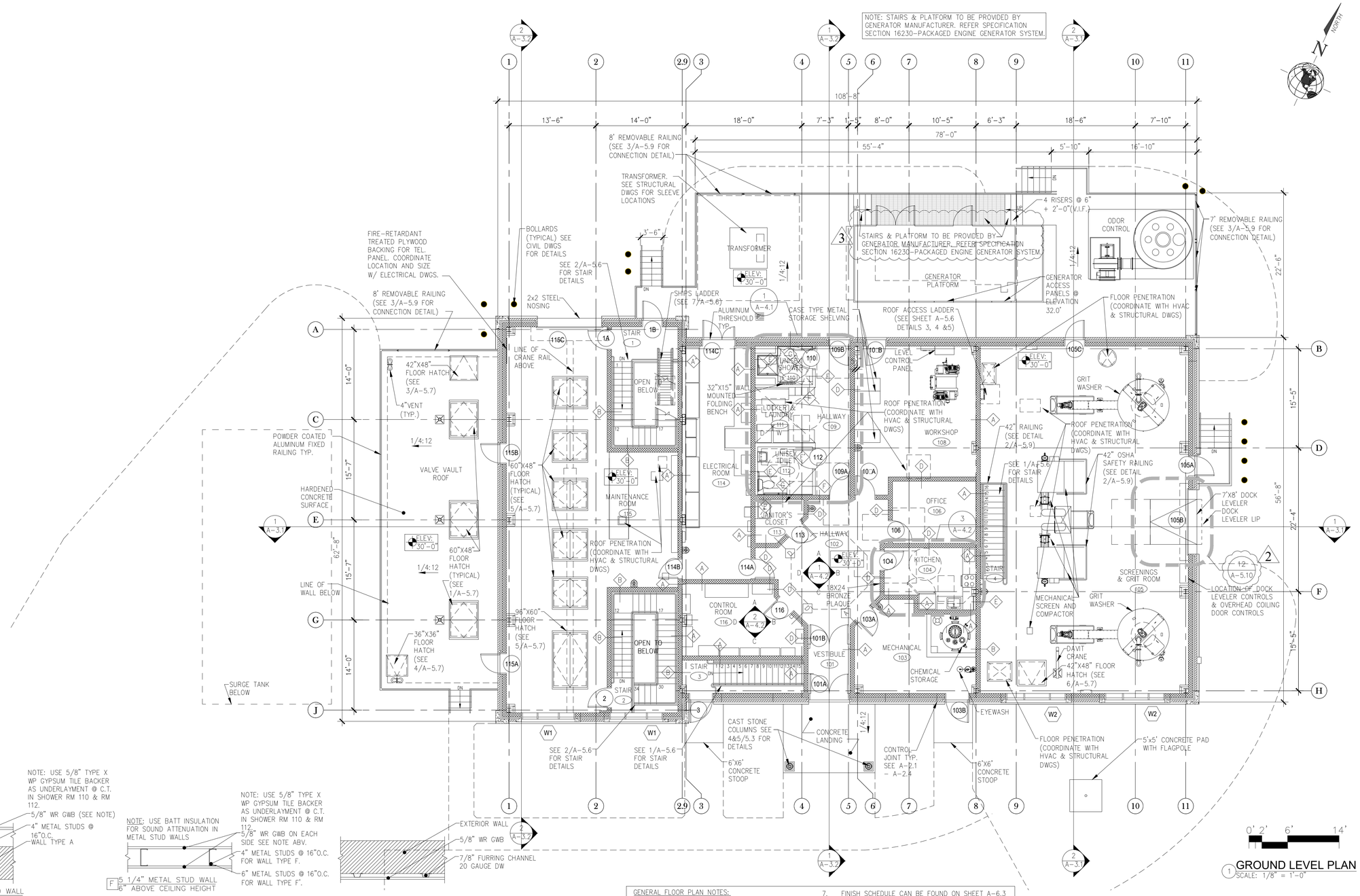

1 GROUND LEVEL PLAN
SCALE: 1/8" = 1'-0"

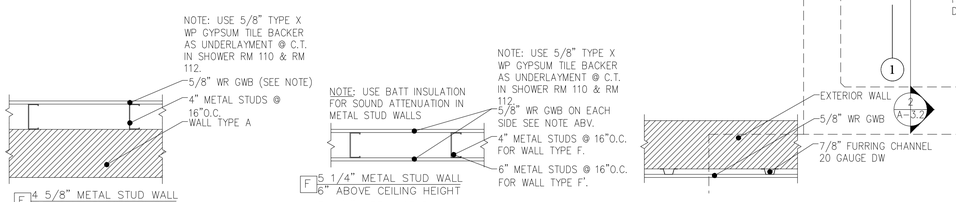

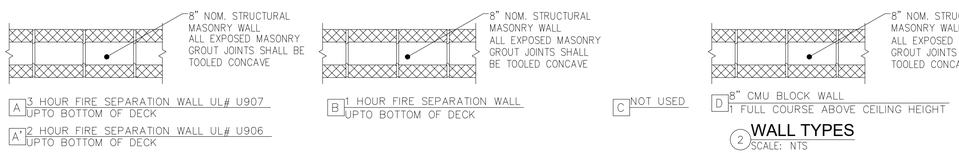

2 WALL TYPES
SCALE: NTS

GENERAL FLOOR PLAN NOTES:

1. ANY NOTES, KEYS, TAGS THAT SPECIFY ONE SOLE PRODUCT/MANUFACTURER SHALL BE CONSIDERED THE BASIS OF DESIGN AND SIMILAR PRODUCTS CAN BE SUBMITTED FOR APPROVAL AS SIMILAR OR EQUAL UNLESS OTHERWISE NOTED.
2. ALL DIMENSIONS ARE SHOWN TO THE FACE OF MASONRY/STUD.
3. WALL TYPE SCHEDULE CAN BE FOUND ON SHEET A-1.1
4. ABBREVIATIONS CAN BE FOUND ON SHEET A-00.2
5. SECTIONS CAN BE FOUND ON A-3.1 - A-3.3 AND DETAILS ON A-5.1 - A-5.10
6. INTERIOR ELEVATIONS CAN BE FOUND ON SHEETS A-4.1 - A-4.2
7. FINISH SCHEDULE CAN BE FOUND ON SHEET A-6.3 DOOR AND WINDOW SCHEDULE AND DETAILS CAN BE FOUND ON SHEETS A-6.1 & A-6.2.
8. COORDINATE ALL WALL, FLOOR, AND ROOF FRAMING/OPENINGS WITH PLUMBING, HVAC, ELECTRICAL, AND STRUCTURAL DRAWINGS
9. COORDINATE BLOCKING INSTALLATIONS FOR BATHROOMS AND OTHER AREAS WHERE HANDRAILS AND OR CASE WORK WOULD BE ATTACHED TO WALLS.
10. ALL BATHROOMS, LAUNDRY ROOM, AND JANITOR'S CLOSET SHALL BE OUTFITTED WITH 5/8" WR GWB.
11. SEE MECHANICAL PROCESS DRAWINGS FOR ALL FINAL PROCESS EQUIPMENT & PIPING LOCATIONS.
12. CONTRACTORS TO COORDINATE ALL CONCRETE SLEEVE LOCATIONS WITH ALL TRADES.

SEE SHEET A-1.12 FOR FULLY DIMENSIONED FLOOR PLAN

CDR MAGUIRE
2080 Silas Deane Highway
Rocky Hill, Connecticut
TEL. (860) 563-3158
www.cdrmaguire.com

REVISIONS

Number	Description	Date
1	ADDRESS DEEP REVIEW	5/6/2016
2	BID ADDENDUM-1	7/11/2016
3	BID ADDENDUM-2	7/19/2016

FRANCIS T. PATNAUDE INTER-MUNICIPAL PUMPING STATION

MIDDLETOWN, CT

GROUND LEVEL ARCHITECTURAL PLAN

PROJECT NUMBER: 14712
DESIGNED BY: PSP
DRAWN BY: LRE
DATE: FEBRUARY 23, 2016

SHEET NUMBER:

A-1.1

DRAWING FILE: L:\A13005 Middletown Pump Station\Contract Documents\A-1.1 (Ground Plan) (MS).dwg PLOTTED: Jul 14,2016-3:27pm BY: Sullivan

NOTE:
1. PIPE MUST BE ANCHORED TO ENSURE STABILITY.
2. WHEN OUTSIDE DIAMETER OF THE PIPE EXCEEDS 18", ADDITIONAL FIELD MEMBRANE SECUREMENT REQUIRED.
3. CLAMPING RING AROUND TOP OF FORM FLASH NOT ALLOWED.
4. APPLY LAP SEALANT AROUND ENTIRE PERIMETER OF FLASHING.

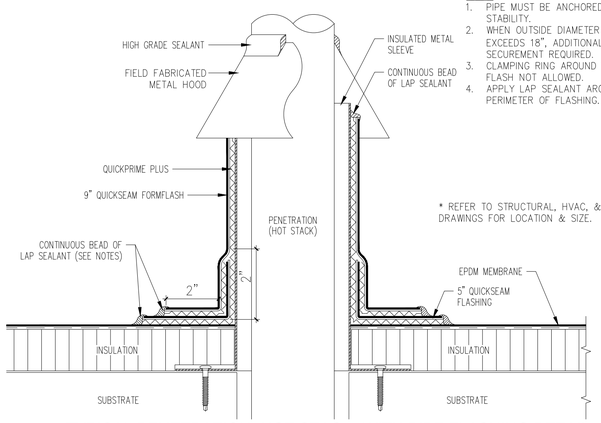

* REFER TO STRUCTURAL, HVAC, & PLUMBING DRAWINGS FOR LOCATION & SIZE.

11 TYPICAL PENETRATION □HOT STAC□□WITH PIPE FLASHING DETAIL
SCALE: 6" = 1'-0"

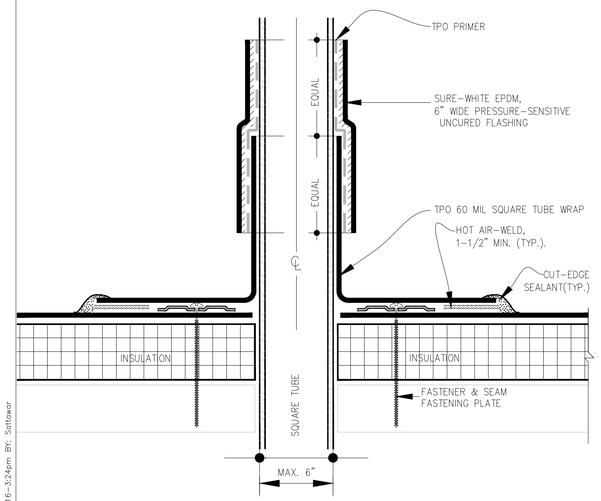

10 TYPICAL PENETRATION □LOUVER RAILING□WITH PIPE FLASHING DETAIL
SCALE: 6" = 1'-0"

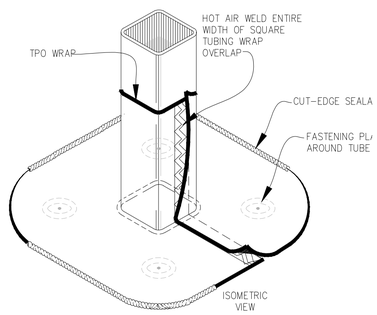

NOTES:

1. INSTALL A MINIMUM OF 4 SEAM FASTENING PLATES FOR TUBE SIDE DIMENSIONS UP TO 6".
2. FASTENERS AND PLATES ARE NOT REQUIRED ON ADHERED SYSTEM.
3. APPROXIMATELY 1/8" DIAMETER BEAD OF CUT-EDGE SEALANT IS REQUIRED ON CUT EDGES OF REINFORCED TPO MEMBRANE.
4. REGARDLESS OF THE FIELD MEMBRANE THICKNESS, THERMOPLASTIC "T-JOINT" COVERS ARE REQUIRED OVER THE SPLICE INTERSECTIONS OF THE SQUARE TUBE WRAP.

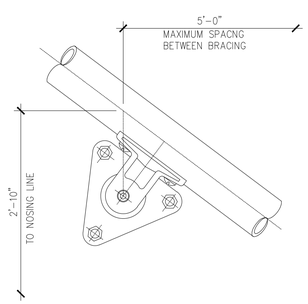

5 TYPICAL WALL RAILING DETAILS
SCALE: NTS

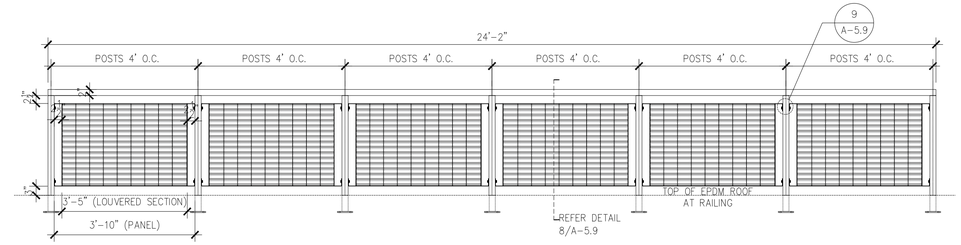

7 TYPICAL DECORATIVE LOUVERED RAILINGS DIMENSIONS
SCALE: NTS

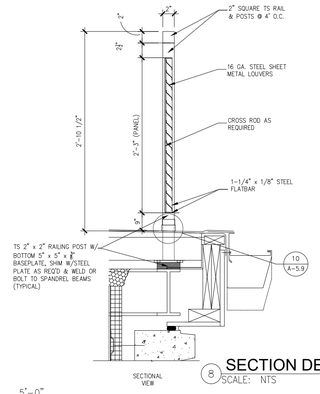

8 SECTION DETAIL
SCALE: NTS

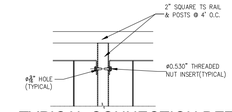

9 TYPICAL CONNECTION DETAIL
SCALE: NTS

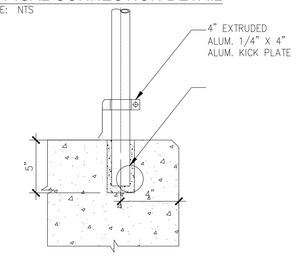

4 TYPICAL CONCRETE CONNECTION WITH □IC□ PLATE
SCALE: NTS

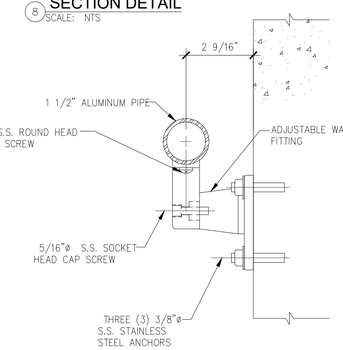

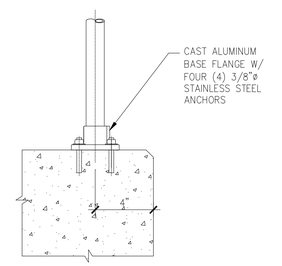

3 REMOVABLE RAILING CONNECTION DETAIL
SCALE: NTS

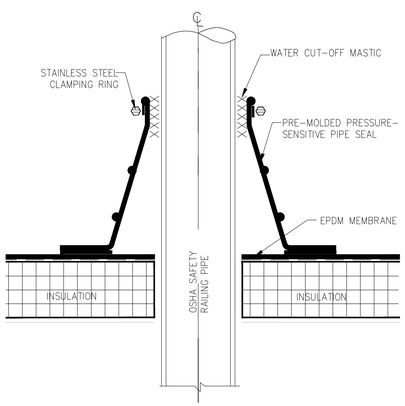

NOTES:

1. APPLY EPDM PRIMER TO SPLICE AREA.
2. PIPE SEAL MUST HAVE INTACT RIB AT TOP EDGE, REGARDLESS OF PIPE DIAMETER.
3. DECK FLANGES OF THE PRE-MOLDED PIPE SEAL SHALL NOT BE OVERLAPPED, CUT OR APPLIED OVER ANY ANGLE CHANGE.
4. WHEN A FIELD SPLICE INTERSECTS A PIPE SEAL, APPLY LAP SEALANT ALONG THE EDGE OF THE MEMBRANE SPLICE COVERING THE EXPOSED SPLICE TAPE 2" IN EACH DIRECTION FROM THE SPLICE INTERSECTION & OVERLAY WITH A 6"X6" T-JOINT COVER.

6 TYPICAL PENETRATION □OSHA SAFETY RAILING□WITH PIPE FLASHING DETAIL
SCALE: 6" = 1'-0"

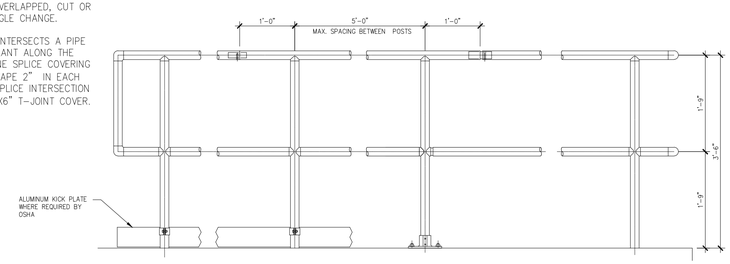

2 TYPICAL OSHA RAILINGS DIMENSIONS
SCALE: NTS

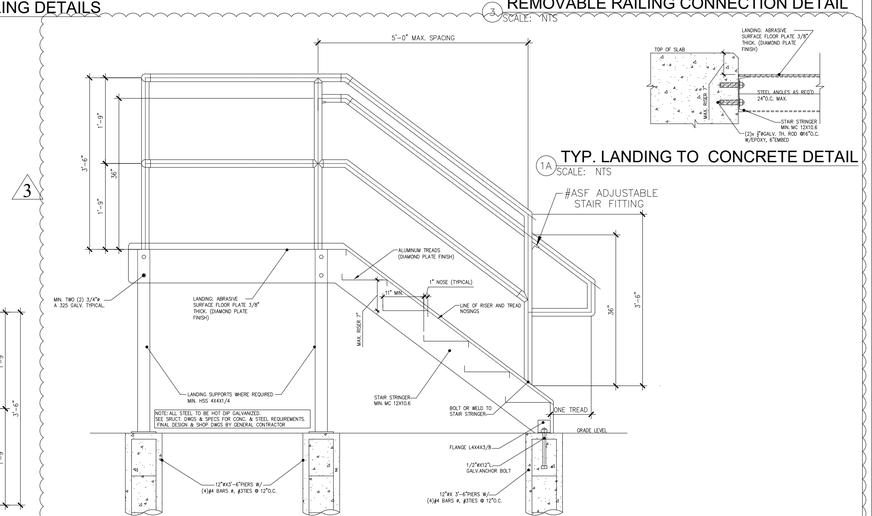

1A TYP. LANDING TO CONCRETE DETAIL
SCALE: NTS

1 TYPICAL E□TERIOR STAIR DETAIL & RAILING DIMENSIONS
SCALE: NTS

DRAWING FILE: L:\A13005 Middletown Pump Station\Contract Documents\A-5.7_-_5.10(Details).dwg PLOTTED: Jul 14,2016-3:24pm BY: Sattaoor

CDR MAGUIRE
2080 Silas Deane Highway
Rocky Hill, Connecticut
TEL. (860) 563-3158
www.cdrmaguire.com

LANDMARK ARCHITECTS, P.C.
DESIGN / RESTORE / BUILD
64 Thompson Street, Suite A105
East Haven, CT 06513-5707
P: 203-468-2441
www.landmarkarch.com

REVISIONS

Number	Description	Date
1	ADDRESS DEEP REVIEW	5/6/2016
2	BID ADDENDUM-1	7/11/2016
3	BID ADDENDUM-2	7/19/2016

CITY OF MIDDLETOWN CONNECTICUT

FRANCIS T. PATNAUDE INTER-MUNICIPAL PUMPING STATION

MIDDLETOWN, CT

RAILING DETAILS

PROJECT NUMBER: 14712
DESIGNED BY: PSP
DRAWN BY: PM
DATE: FEBRUARY 23, 2016

SHEET NUMBER:

A-5.9

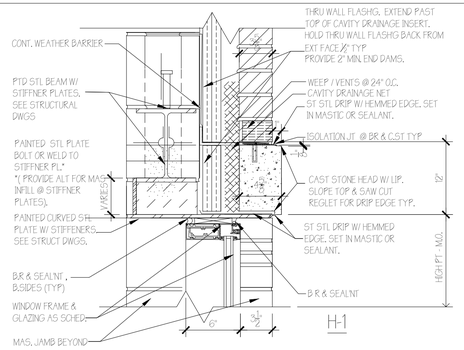

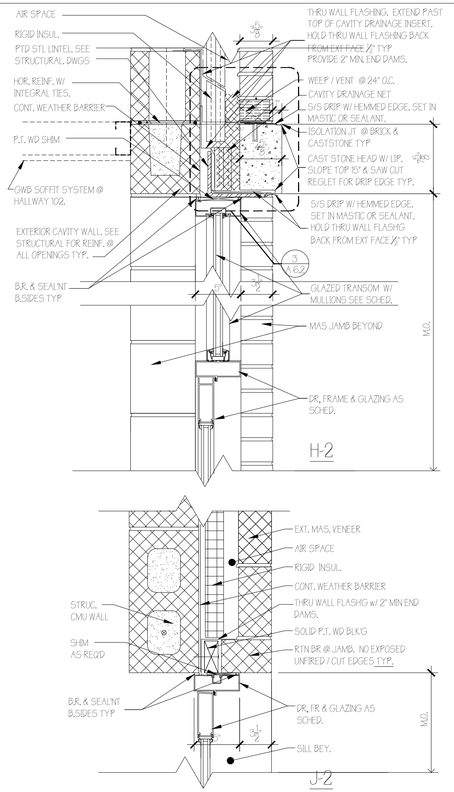

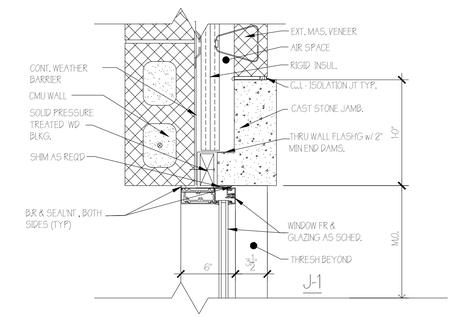

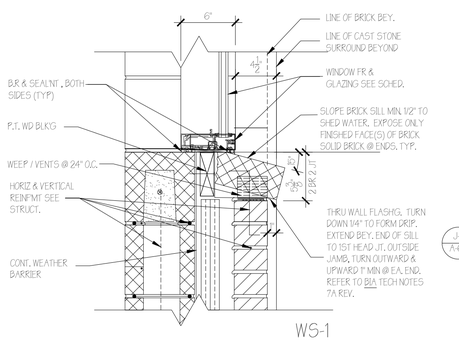

3 DOOR & WINDOW DETAILS
SCALE: 1-1/2" = 1'-0"

DOOR SCHEDULE

DOOR NUMBER	DETAIL SHEET	DOOR MAT'L: ALUMINUM	DOOR MAT'L: PAINTED HOLLOW METAL	DOOR MAT'L: BRUSHED STAINLESS STEEL	SIZE: DOUBLE LEAF DOOR	SIZE: 5'-0" WIDE x 7'-0" HIGH	SIZE: 3'-6" WIDE x 7'-0" HIGH	SIZE: 7'-0" WIDE x 7'-0" HIGH	SIZE: 6'-0" WIDE x 7'-0" HIGH	SIZE: 10'-0" WIDE x 9'-4" HIGH	LEAF TYPE / FRAME TYPE: SEE SHEET A6.1	FRAME DETAIL / SHEET NUMBER: HEAD DETAIL A6.1, A6.2, A6.3	FRAME DETAIL / SHEET NUMBER: JAMB DETAIL A6.1, A6.2, A6.3	FRAME DETAIL / SHEET NUMBER: SILL DETAIL A6.1, A6.2, A6.3	FRAME MAT'L: THERMALLY BROKEN ALUMINUM	FRAME MAT'L: PAINTED HOLLOW METAL	FRAME MAT'L: BRUSHED STAINLESS STEEL	FIRE RATING (MINUTES): 180 MINUTES	FIRE RATING (MINUTES): 90 MINUTES	FIRE RATING (MINUTES): 60 MINUTES	FIRE RATING (MINUTES): 45 MINUTES	LINTEL SIZE see STR. DWG: 4'-0" WIDE x 8" HIGH	LINTEL SIZE: 5'-2" WIDE x 8" HIGH	LINTEL SIZE: 6'-0" WIDE x 8" HIGH	LINTEL SIZE: 10'-0" WIDE x 9" HIGH	LINTEL MAT'L: STEEL	LINTEL MAT'L: CAST STONE	LINTEL MAT'L: CONCRETE	REMARKS
101A	A-6.1	●			●				●		3 / E	H-2	J-2	S-1	●											●			ENTRY DOOR -EXTERIOR
101B	A-6.1	●			●				●		4 / F	H-2sim	J-2sim	S-3	●											●			ENTRY DOOR - VESTIBULE
103A	A-6.1		●			●					5 / A	H-3	J-3	S-2		●		●								●			MORTAR GROUT HM FRAME
103B	A-6.2			●			●				5 / B	H-5L	J-4	S-1			●									●			EXTERIOR DOOR MORTAR GROUT HM FRAME
104	A-6.1		●			●					2 / A	H-3	J-3	S-2		●										●			-
105A	A-6.2			●		●					5 / D	H-5W	J-4	S-1			●									●			EXTERIOR DR IN EXPL. RESISTANT AREA MORTAR GROUT HM FRAME
105B	A-6.3									●	6 / -	H-6	J-6	S-3												●			EXPLOS. RESIS-FACTORY FIN. OH DR W/ GASKETED SILL
105C	A-6.2			●		●					5 / D	H-5W	J-4	S-1			●									●			EXTERIOR DR IN EXPL. RESISTANT AREA MORTAR GROUT HM FRAME
106	A-6.1		●			●					2 / A	H-3	J-3	S-2		●										●			-
108A	A-6.1		●			●					2 / A	H-3	J-3	S-2		●										●			-
108B	A-6.2		●			●					5 / C	H-5W	J-4	S-1		●										●			EXTERIOR DOOR FOAM FILL HM FRAME
109A	A-6.1		●			●					2 / A	H-3	J-3	S-2		●										●			-
109B	A-6.2		●			●					5 / C	H-5W	J-4	S-1		●										●			EXTERIOR DOOR FOAM FILL HM FRAME
110	A-6.1		●			●					5 / A	H-3	J-3	S-4		●										●			-
112	A-6.1		●			●					5 / A	H-3	J-3	S-4		●										●			-
113	A-6.1		●			●					5 / A	H-3	J-3	S-2		●										●			
114A	A-6.1		●			●					5 / A	H-3	J-3	S-3		●		●								●			MORTAR GROUT HM FRAME
114B	A-6.1			●		●					5 / A	H-3	J-3	S-3			●				●					●			MORTAR GROUT HM FRAME
114C	A-6.1		●		●			●			5 / A1	H-4	J-4	S-1		●										●			EXTERIOR DOOR FOAM FILL HM FRAME
115A	A-6.2			●		●					5 / B	H-5L	J-4	S-1			●									●			EXTERIOR DOOR MORTAR GROUT HM FRAME
115B	A-6.2			●		●					5 / B	H-5L	J-4	S-1			●									●			EXTERIOR DOOR MORTAR GROUT HM FRAME
115C	A-6.3	●								●	6 / -	H-6	J-6													●			INSUL. OH DR W/ GASKETED SILL
116	A-6.1		●			●					2 / A	H-3	J-3	S-3		●										●			
1A	A-6.1			●		●					5 / A	H-3	J-3	S-2			●			●						●			MORTAR GROUT HM FRAME
1B	A-6.2			●		●					5 / C	H-5W	J-4	S-1			●									●			EXTERIOR DOOR MORTAR GROUT HM FRAME
2	A-6.1			●		●					5 / A	H-3	J-3	S-2			●			●						●			MORTAR GROUT HM FRAME
3	A-6.2			●			●				5 / D	H-5W	J-4	S-1			●									●			EXTERIOR DR IN EXPL. RESISTANT AREA MORTAR GROUT HM FRAME

DIMENSIONAL NOTE:
ALL DIMENSIONS SHOWN ARE TO ROUGH OPENING. ADJUST ACTUAL FRAME SIZES TO ACCOUNT FOR MANUFACTURER'S RECOMMENDED SPACING AND/OR SHIMMING AT HEADS, JAMBS, AND SILLS.

FINISH NOTE:
ALL FRAMES LOUVERS & DOORS SCHEDULED TO BE PAINTED SHALL HAVE FACTORY APPLIED FINISH, W/ SUPER HD.CORROSION RESIST FINISH. KYNAR 500, PVDF RESIN OR SIM.

GLAZING LEGEND:
B 1" EXPL RESIST. HAZARD CLASS 1, DIV 1.
11 1" TEMPERED THERMAL GLAZING PANEL
1 1/4" TEMPERED GLAZING PANEL

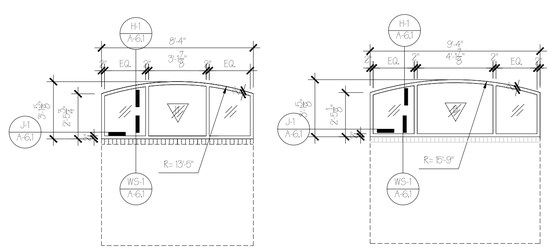

WINDOW TYPE 1 WINDOW TYPE 2

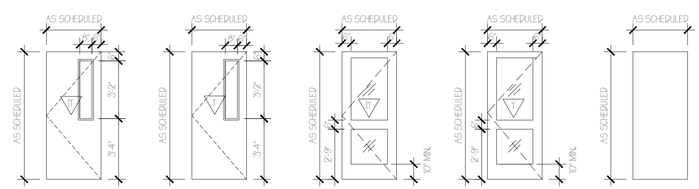

DOOR LEAF TYPE 1 DOOR LEAF TYPE 2 DOOR LEAF TYPE 3 DOOR LEAF TYPE 4 DOOR LEAF TYPE 5

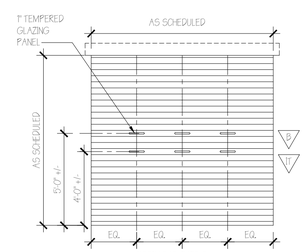

DOOR LEAF TYPE 6
INSULATED METAL OVERHEAD DOOR

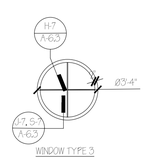

WINDOW TYPE 3

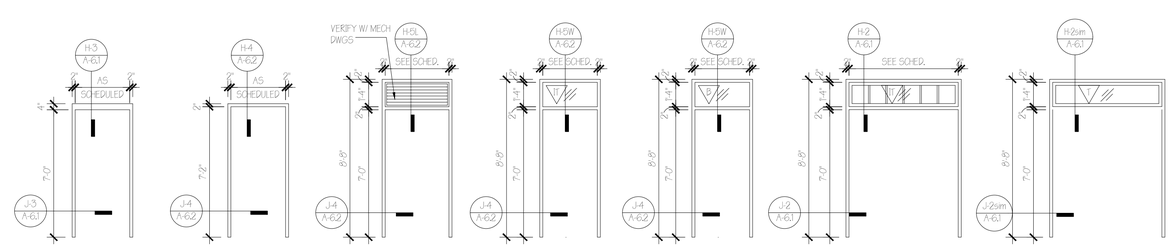

DOOR FRAME TYPE A
FRAME DEPTH WRAPS WALL
DOOR FRAME TYPE A-1 DOOR FRAME TYPE B DOOR FRAME TYPE C DOOR FRAME TYPE D
DOOR FRAME TYPE E
FRAME DEPTH 5 1/2" MIN.
DOOR FRAME TYPE F
FRAME DEPTH 5 1/2" MIN.

2 WINDOW ELEVATIONS
SCALE: 1/4" = 1'-0"

1 DOOR & FRAME ELEVATIONS
SCALE: 1/4" = 1'-0"

CDR MAGUIRE
2080 Silas Deane Highway
Rocky Hill, Connecticut
TEL. (860) 563-3158
www.cdrmaguire.com

LANDMARK ARCHITECTS, P.C.
DESIGN / RESTORE / BUILD
64 Thompson Street, Suite A105
East Haven, CT 06513-5707
P: 203-468-2441
www.landmarkarch.com

REVISIONS

Number	Description	Date
1	ADDRESS DEEP REVIEW	5/6/2016
2	BID ADDENDUM-1	7/11/2016
3	BID ADDENDUM-2	7/19/2016

CITY OF MIDDLETOWN CONNECTICUT

FRANCIS T. PATNAUDE INTER-MUNICIPAL PUMPING STATION

MIDDLETOWN, CT

DOOR SCHEDULE, WINDOW SCHEDULE DOOR & WINDOW TYPES

PROJECT NUMBER: 14712
DESIGNED BY: PSP
DRAWN BY: MJM
DATE: FEBRUARY 23, 2016

SHEET NUMBER:

A-6.1

DRAWING FILE: L:\A13005 Middletown Pump Station\Contract Documents\A-6.1_-_6.3.dwg PLOTTED: Jul 14,2016-6:25pm BY: Sottower

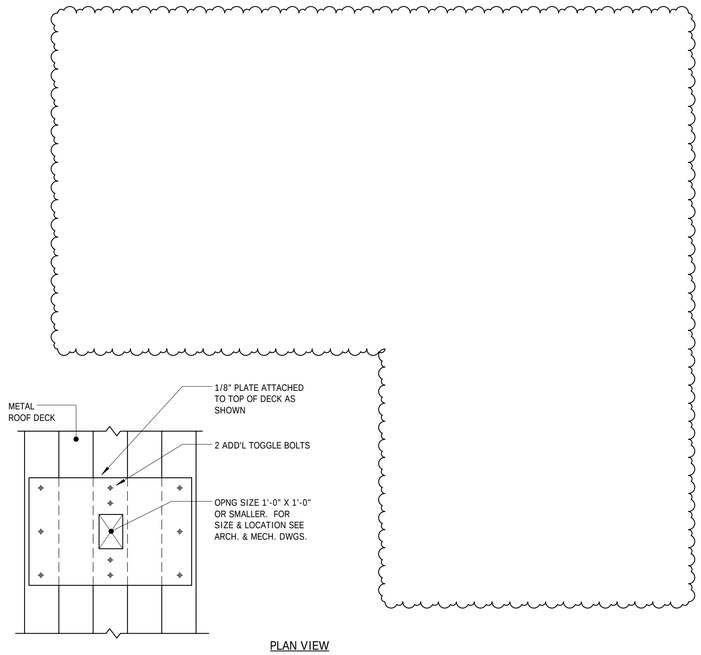

PLAN VIEW

NOTES:

1. NO REINF. REQUIRED IF OPENING IS 6" OR SMALLER PROVIDED ONLY ONE RIB IS INTERRUPTED.
2. CLUSTER OPENINGS THAT ARE SPACED LESS THAN 1'-0" SHALL BE TREATED AS ONE LARGE OPENING AND PROVIDE THE REINF. OR FRAMING AS PER DETAIL ABOVE.
3. SEE METAL DECK GENERAL NOTES FOR ADDITIONAL REQUIREMENTS.
4. ATTACH DECK (ENDS AND SIDE LAPS) TO CHANNELS. (TYP.)

1 S-5.4 TYPICAL REINFORCING DETAIL AT ROOF DECK OPENING

Not to Scale

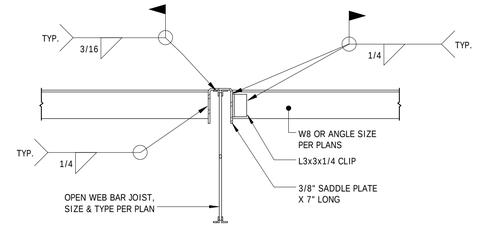

W8 OR ANGLE ON EACH SIDE OF JOIST

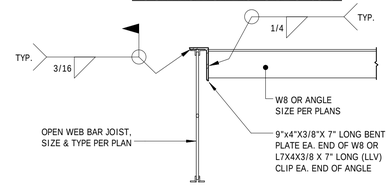

W8 OR ANGLE ON ONE SIDE OF JOIST

2 S-5.4 TYP. W8 OR ANGLE TO TOP CHORD CONNECTION DETAIL

Scale: 3/4" = 1'-0"

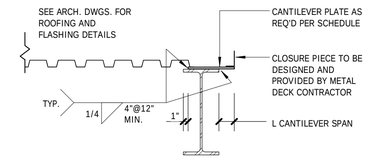

CANTILEVER SPAN 'L'	THICKNESS OF BENT PLATE OR CLOSURE
L ≤ 2'-0"	3/8"
L ≤ 1'-4"	1/4"
L ≤ 10"	10 GAGE
L ≤ 8"	12 GAGE

NOTES:

1. FOR VALUES OVER TABULATED VALUES, DECK MANUFACTURER TO PROVIDE DETAIL AND SUPPORTING CALCULATIONS FOR ENGINEERS REVIEW.
2. SEE ADDITIONAL DETAILS AT CURTAINWALL SUPPORT LOCATIONS.

3 S-5.4 TYPICAL METAL ROOF DECK EDGE DETAIL

Not to Scale

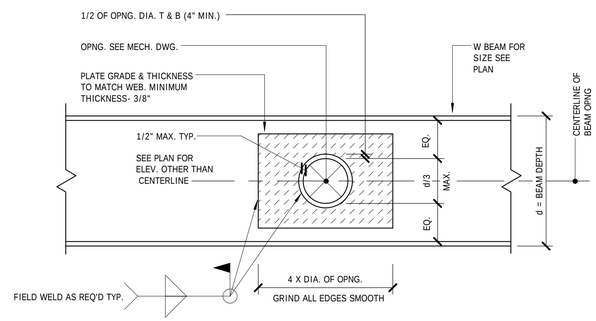

NOTES:

1. FOR SIZE OF OPENINGS SEE PLANS AND PLUMBING DRAWINGS.
2. ALL FILLET WELDS SHALL SATISFY TABLE J2,4 OF AISC ASD SPECIFICATIONS AND SHALL NOT BE LESS THAN 1/4".
3. BEAM PENETRATIONS WITHOUT ELEVATIONS INDICATED ARE TO BE LOCATED AT THE CENTER OF THE WEB OF BEAM.

4 S-5.4 TYP. REINFORCING DETAIL OF OPENING IN WEB OF STEEL BEAM

Scale: 3/4" = 1'-0"

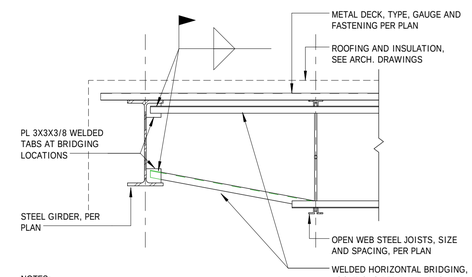

NOTES:
1. DO NOT WELD BRIDGING TO JOIST WEB MEMBERS.
2. DO NOT SUPPORT LOADS OF ANY TYPE FROM BRIDGING

5 S-5.4 TYPICAL OPEN WEB JOIST HORIZ. BRIDGING DETAIL

Scale: 3/4" = 1'-0"

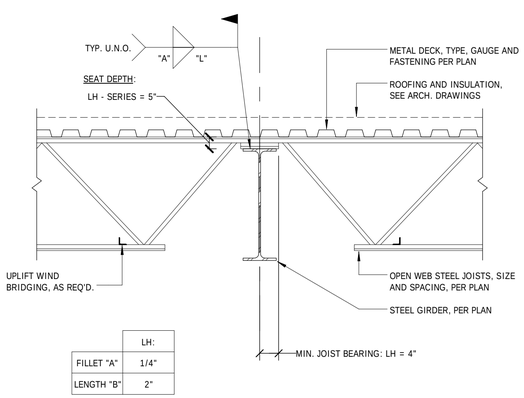

	LH:
FILLET "A"	1/4"
LENGTH "B"	2"

6 S-5.4 TYPICAL OPEN WEB JOIST BEARING ON STL. GIRDER

Scale: 3/4" = 1'-0"

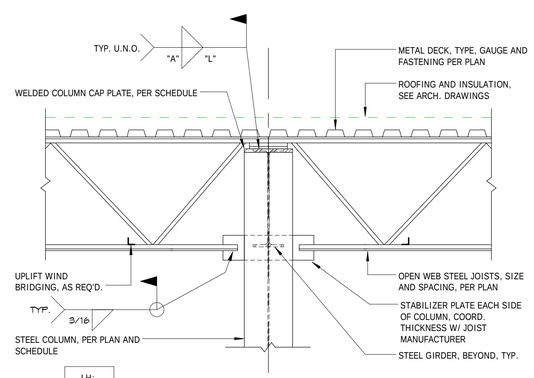

	LH:
FILLET "A"	1/4"
LENGTH "B"	2"

7 S-5.4 TYPICAL OPEN WEB JOIST BEARING ON STL. COLUMN

Scale: 3/4" = 1'-0"

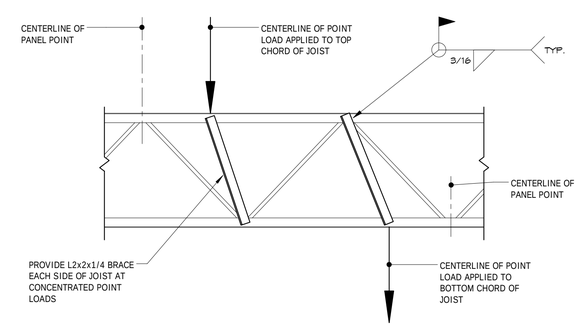

8 S-5.4 TYP. OPEN WEB JOIST REINFORCEMENT AT CONCENTRATED LOADS

Scale: 3/4" = 1'-0"

CDR MAGUIRE
2080 Silas Deane Highway
Rocky Hill, Connecticut
TEL. (860) 563-3158
www.cdrmaguire.com

LANDMARK ARCHITECTS, P.C.
DESIGN / RESTORE / BUILD
64 Thompson Street, Suite A105
East Haven, CT 06513
phone: 203-468-2441
www.landmarkarch.com

Innovative Engineering Services, LLC
Consulting Engineers
64 Thompson Street, Suite A101
East Haven, CT 06513
Tel: 203.467.4370 Fax: 203.468.6172
Web: www.iesllc.biz

REVISIONS

Number	Description	Date
1	ADDRESS DEEP REVIEW	5/6/2016
2	BID ADDENDUM 2	7/19/2016

FRANCIS T. PATNAUDE INTER-MUNICIPAL PUMPING STATION

MIDDLETOWN, CT

TYPICAL STEEL DETAILS II

PROJECT NUMBER: 14712.02
DESIGNED BY: IES
DRAWN BY: IES
DATE: FEBRUARY 23, 2016

SHEET NUMBER:

S-5.4

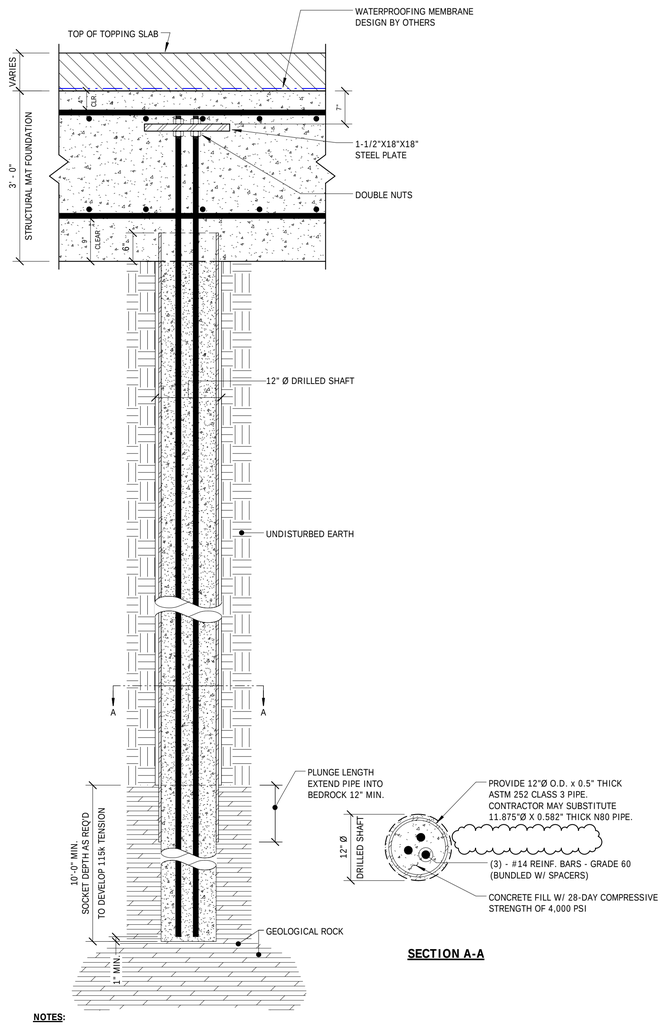

NOTES:

1. CONTRACTOR TO TAKE ADEQUATE PRECAUTIONS TO PREVENT EXCAVATION DEBRIS FROM ENTERING AND FILLING ANULAR SPACE AROUND SHELL.
2. INSTALLATION PROCEDURE TO BE DETERMINED BY FOUNDATION CONTRACTOR, REVIEWED AND APPROVED BY ENGINEER, AND PROVEN BY LOAD TEST.
3. DO NOT PRESSURE GROUT. GROUT PRESSURE NOT TO EXCEED 50 PSI.
4. ALL MICROPILES ARE BASED ON A 175 TON CAPACITY.

1 S-5.6 TYPICAL MICROPILE DETAIL
Scale: 3/4" = 1'-0"

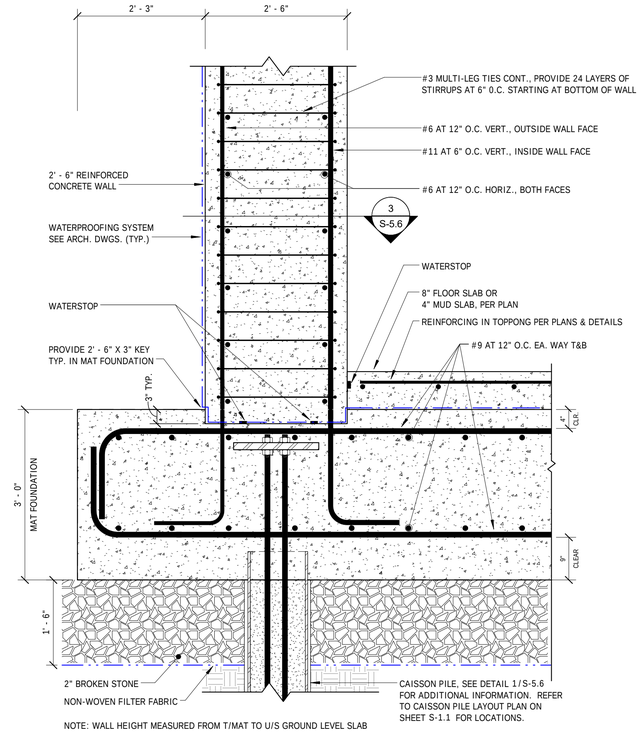

NOTE: WALL HEIGHT MEASURED FROM T/MAT TO U/S GROUND LEVEL SLAB

2 S-5.6 TYP. 30" FDN. WALL (WALL HEIGHTS 21' - 0" TO 30' - 6" MAX.)
Scale: 3/4" = 1'-0"

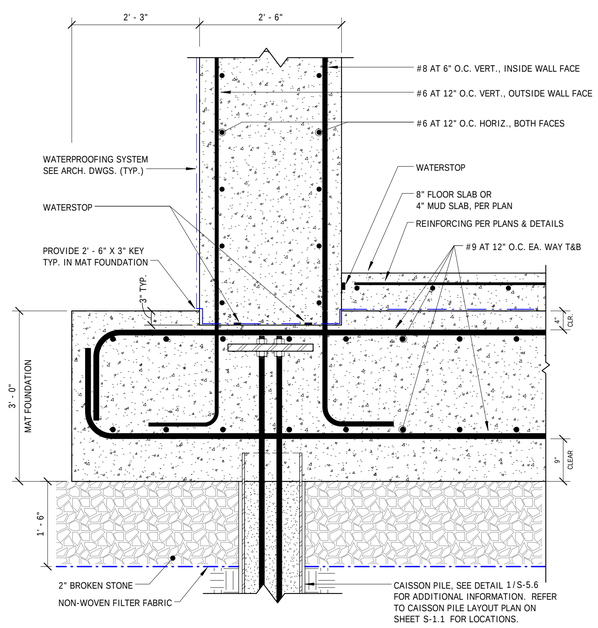

4 S-5.6 TYP. 30" FDN. WALL (WALL HEIGHT UP TO 21' - 0" MAX)
Scale: 3/4" = 1'-0"

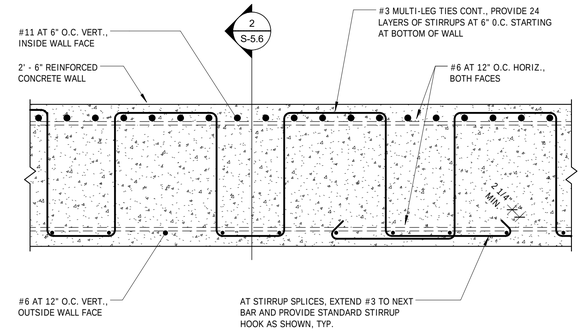

3 S-5.6 PLAN VIEW OF 30" CONCRETE SHEAR WALL W/ SHEAR REINF.
Scale: 3/4" = 1'-0"

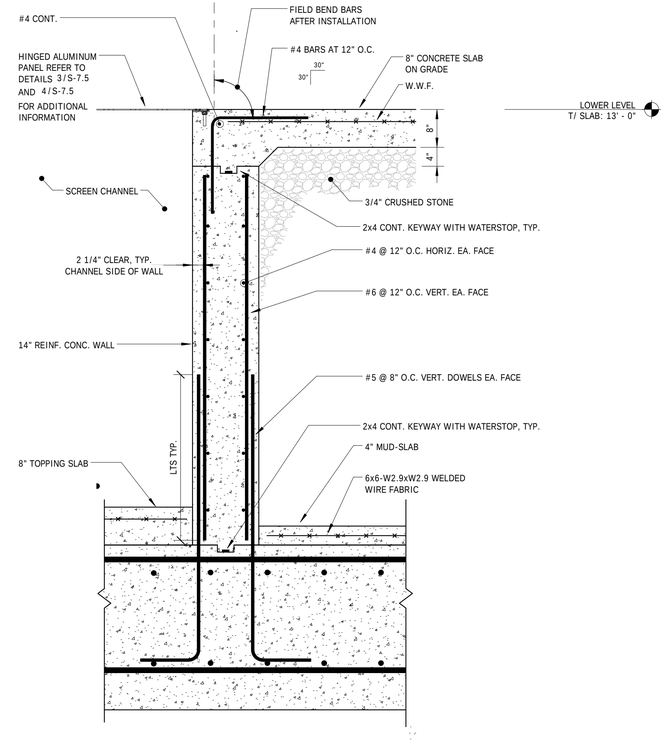

5 S-5.6 WALL SECTION AT CONCRETE CHANNEL
Scale: 3/4" = 1'-0"

CDR MAGUIRE
2080 Silas Deane Highway
Rocky Hill, Connecticut
TEL. (860) 563-3158
www.cdrmaguire.com

LANDMARK ARCHITECTS, P.C.
DESIGN / RESTORE / BUILD
64 Thompson Street, Suite A105
East Haven, CT 06513
phone: 203-468-2441
www.landmarkarch.com

REVISIONS

Number	Description	Date
1	ADDRESS DEEP REVIEW	5/6/2016
2	BID ADDENDUM 3	7/19/2016

IES
Innovative Engineering Services, LLC
Consulting Engineers
64 Thompson Street, Suite A101
East Haven, CT 06513
Tel: 203.467.4370 Fax: 203.468.6172
Web: www.iesllc.biz

CITY OF MIDDLETOWN CONNECTICUT

FRANCIS T. PATNAUDE INTER-MUNICIPAL PUMPING STATION

MIDDLETOWN, CT

STRUCTURAL CONCRETE DETAILS I

PROJECT NUMBER: 14712.02
DESIGNED BY: IES
DRAWN BY: IES
DATE: FEBRUARY 23, 2016

SHEET NUMBER:

S-5.6

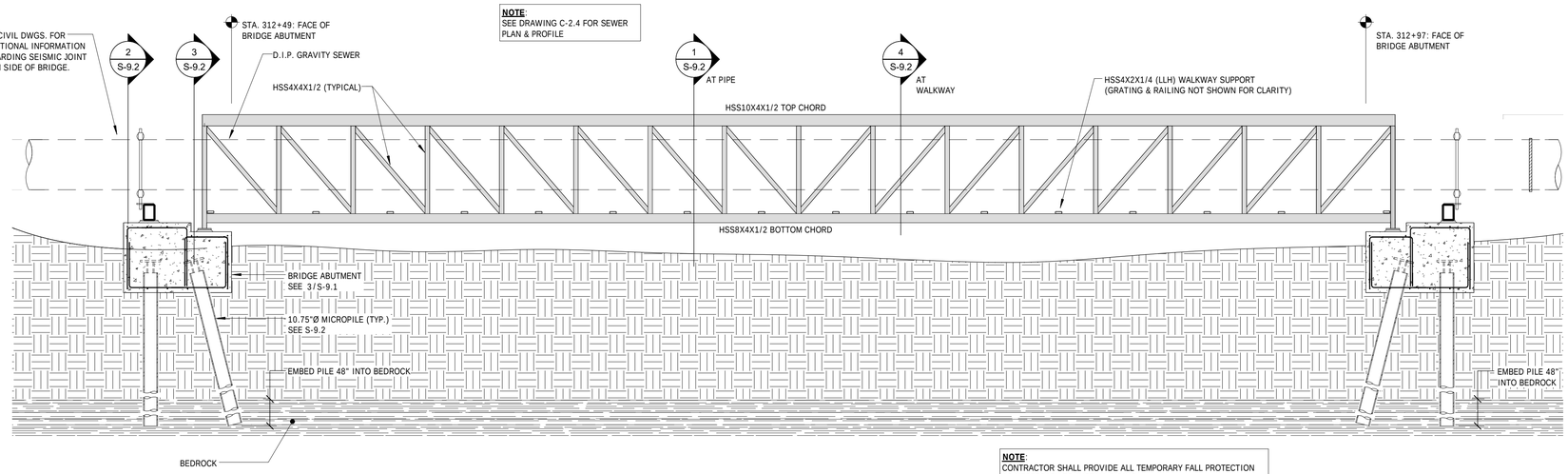

NOTE:
SEE DRAWING C-2.4 FOR SEWER PLAN & PROFILE

NOTE:
CONTRACTOR SHALL PROVIDE ALL TEMPORARY FALL PROTECTION AS NECESSARY TO INSTALL PIPING.
CONTRACTOR TO SET INITIAL PIPE SLOPE AND RE-SET SLOPE ONCE PIPE HAS BEEN ACTIVATED TO REMOVE ANY DEFLECTION.
CONTRACTOR TO PROVIDE FINAL FIELD VERIFICATION OF BRIDGE ABUTMENT LOCATIONS BASED ON EXISTING CONDITIONS.

1 S-9.1 PIPE BRIDGE ELEVATION
Not to Scale

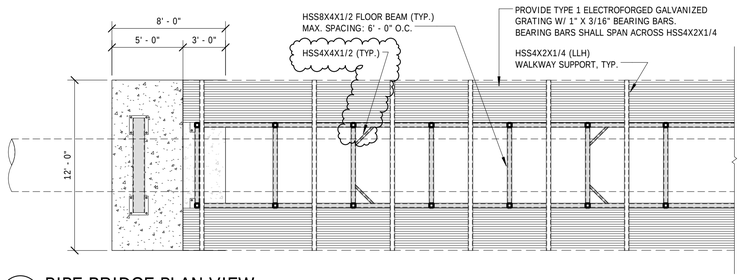

2 S-9.1 PIPE BRIDGE PLAN VIEW
Scale: 3/16" = 1'-0"

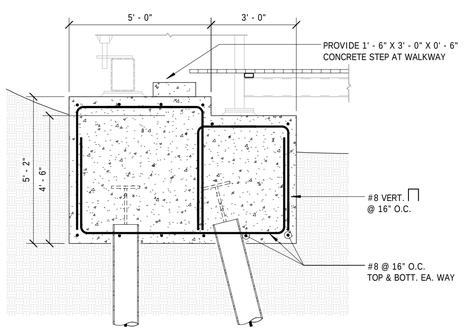

3 S-9.1 BRIDGE ABUTMENT/ PILE CAP DETAIL
Scale: 3/8" = 1'-0"

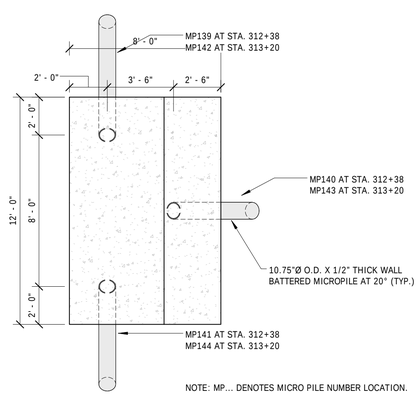

NOTE: MP... DENOTES MICRO PILE NUMBER LOCATION.

4 S-9.1 PILE LOCATION PLAN
Scale: 1/4" = 1'-0"

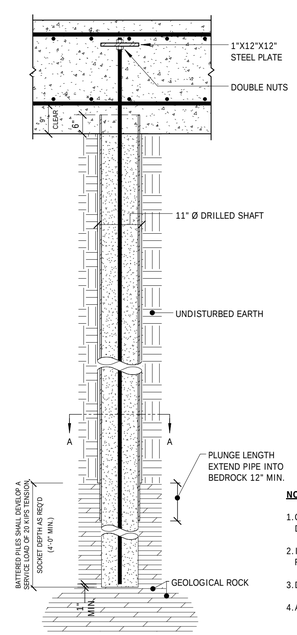

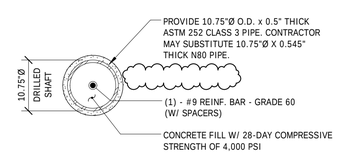

SECTION A-A

NOTES:

1. CONTRACTOR TO TAKE ADEQUATE PRECAUTIONS TO PREVENT EXCAVATION DEBRIS FROM ENTERING AND FILLING ANULAR SPACE AROUND SHELL.
2. INSTALLATION PROCEDURE TO BE DETERMINED BY FOUNDATION CONTRACTOR, REVIEWED AND APPROVED BY ENGINEER, AND PROVEN BY LOAD TEST.
3. DO NOT PRESSURE GROUT. GROUT PRESSURE NOT TO EXCEED 50 PSI.
4. ALL MICROPILES ARE BASED ON A 30-TON CAPACITY.

5 S-9.1 TYPICAL MICROPILE DETAIL AT BRIDGE ABUTMENT
Scale: 1/2" = 1'-0"

PREFABRICATED PIPE BRIDGE SYSTEM

1.0 SCOPE
IN ADDITION TO THE PERFORMANCE REQUIREMENTS BELOW SPECIFICATION SECTION 05100 "STRUCTURAL STEEL" SHALL APPLY TO ALL WORK.

THE WORK CONSISTS OF FURNISHING ALL NECESSARY ENGINEERING AND DESIGN AS REQUIRED, SUPERVISION, LABOR, MATERIALS, EQUIPMENT, AND DELIVERY TO PERFORM ALL WORK NECESSARY TO FURNISH, FABRICATE, AND INSTALL A CLEAR SPAN PIPE BRIDGE SYSTEM OF GALVANIZED STEEL CONSTRUCTION AS INDICATED ON THE DRAWINGS. SCOPE INCLUDES ALL BASE PLATES, LEVELING PLATES, MOUNTING PLATES REQUIRED FOR PIPE SUPPORT, TRUSS MEMBERS INCLUDING ANY DIAGONAL BRACING REQUIRED TO MEET DEFLECTION OR STRENGTH REQUIREMENTS, AND MISCELLANEOUS LATERAL BRACING AS REQUIRED TO PREVENT BUCKLING OF PRIMARY MEMBERS.

2.0 BASIS OF DESIGN
PIPE BRIDGE SYSTEM SHALL SUPPORT A 36-INCH DIAMETER D.I.P GRAVITY FLOW SEWER MAIN AS SHOWN ON THE DRAWINGS. THE BRIDGE SHALL BE PREFABRICATED AND MAY BE DELIVERED TO THE SITE IN SECTIONS. BASIS OF DESIGN AND FABRICATION SHALL BE CONTECH ENGINEERED SOLUTIONS, LLC "CONTINENTAL PEDESTRIAN BRIDGE SYSTEMS" OR "CAMERON BRIDGE WORKS, LLC" EQUIVALENT. PREFABRICATED BRIDGE DESIGNER AND FABRICATOR SHALL HAVE A MINIMUM OF FIVE YEARS' SUCCESSFUL EXPERIENCE IN DESIGNING AND FABRICATING PROJECTS OF SIMILAR SIZE AND CONSTRUCTION.

3.0 DESIGN CRITERIA
STEEL SIZES SHOWN ON THE DRAWINGS ARE PRELIMINARY ONLY FOR THE PURPOSES OF ESTIMATING. THE FINAL DESIGN SHALL BE PREPARED BY THE PREFABRICATED PIPE BRIDGE SUPPLIER UTILIZING THE FOLLOWING DESIGN CRITERIA:

A. CODES AND STANDARDS:
1. IBC 2003 AS ADOPTED AND AMENDED BY THE STATE OF CONNECTICUT BUILDING.
2. ASCE 7 MINIMUM DESIGN LOADS FOR BUILDINGS AND OTHER STRUCTURES
3. AMERICAN INSTITUTE OF STEEL CONSTRUCTION (AISC), STEEL CONSTRUCTION MANUAL, CURRENT EDITION.
4. AMERICAN WELDING SOCIETY (AWS) "STRUCTURAL WELDING CODE", LATEST EDITION.
5. AISC - "SPECIFICATION FOR STRUCTURAL JOINTS USING ASTM A325 OR A490 BOLTS", LATEST EDITION.
6. AMERICAN SOCIETY FOR TESTING AND MATERIALS "ASTM STANDARDS IN BUILDING CODES", LATEST EDITION.
7. AISC "HOLLOW STRUCTURAL SECTIONS CONNECTIONS MANUAL", LATEST EDITION.
8. FOR ADDITIONAL REFERENCES AND REQUIREMENTS SEE DRAWING S-0.1 "STRUCTURAL STEEL NOTES" AND SPECIFICATION SECTION 05100.

B. DESIGN LOADS:
DESIGN LOAD SHALL BE THE MOST UNFAVORABLE LOAD ACTING AS DETERMINED BY LOAD COMBINATIONS CALCULATED ACCORDANCE WITH THE IBC 2003 AS ADOPTED AND AMENDED BY THE STATE OF CONNECTICUT BUILDING CODE AND ASCE 7.

1. SEE DRAWING S-0.1 FOR SEISMIC, WIND, AND SNOW LOAD REQUIREMENTS.
2. ICE LOADS SHALL BE IN ACCORDANCE WITH ASCE 7 – 02.
3. BRIDGE SELF-WEIGHT.
4. 36-INCH DIAMETER DUCTILE IRON PIPE FLOWING FULL = 700 LBS PER FOOT.

C. STRUCTURE CATEGORY CLASSIFICATION - III
IMPORTANCE FACTOR=1.5

D. DESIGN LIMITATIONS:
1. VERTICAL DEFLECTION – LIMIT TOTAL DEAD LOAD PLUS FULL FLOWING PIPE LOAD DEFLECTION TO L/800
2. HORIZONTAL DEFLECTION – HORIZONTAL DEFLECTION DUE TO SEISMIC OR WIND SHALL NOT EXCEED L/500

E. CONTRACTOR'S DESIGN RESPONSIBILITY:
1. THE PIPE BRIDGE SUPPLIER SHALL SUBMIT SHOP AND ERECTION DRAWINGS IN ACCORDANCE WITH SPECIFICATION SECTION 05100 FOR THE COMPLETE PREFABRICATED BRIDGE DESIGN INDICATED ON THE CONTRACT DOCUMENTS INCLUDING STRUCTURAL CALCULATIONS FOR THE DESIGN. THE CALCULATIONS AND SHOP DRAWINGS SHALL BE SIGNED AND SEALED BY THE PROFESSIONAL ENGINEER LICENSED IN THE STATE OF CONNECTICUT RESPONSIBLE FOR THEIR PREPARATION.

4.0 MANUFACTURER'S STANDARD WARRANTY
SEE DRAWING S-0.1 "STRUCTURAL STEEL NOTES" AND SPECIFICATION SECTION 05100. BRIDGE MEMBERS SHALL BE TUBULAR SHAPES FOR ALL PRIMARY MEMBERS AND FLOOR BEAMS. SECONDARY BRACING MAY BE CHANNELS. ALL TUBULAR SHAPES SHALL BE CAPPED OR SEALED TO PREVENT THE COLLECTION OF WATER INSIDE THE TUBES.

5.0 FINISH
ALL STEEL SHALL BE GALVANIZED WITH A MINIMUM G 120 COATING AND SHOP COATED IN ACCORDANCE WITH SPECIFICATION 099600 - HIGH PERFORMANCE COATINGS.

6.0 WARRANTY
PIPE BRIDGE MANUFACTURER SHALL WARRANT THE STEEL STRUCTURE TO BE FREE OF DESIGN, MATERIAL, AND WORKMANSHIP DEFECTS FOR A PERIOD OF 10 YEARS.

CDR MAGUIRE
2080 Silas Deane Highway
Rocky Hill, Connecticut
TEL. (860) 563-3158
www.cdrmaguire.com

LANDMARK ARCHITECTS, P.C.
DESIGN / RESTORE / BUILD
64 Thompson Street, Suite A105
East Haven, CT 06513
phone: 203-468-2441
www.landmarkarch.com

Innovative Engineering Services, LLC
Consulting Engineers
64 Thompson Street, Suite A101
East Haven, CT 06513
Tel: 203.467.4370 Fax: 203.468.6172
Web: www.iesllc.biz

REVISIONS

Number	Description	Date
1	ADDRESS DEEP REVIEW	5/6/2016
2	BID ADDENDUM 3	7/19/2016

FRANCIS T. PATNAUDE INTER-MUNICIPAL PUMPING STATION

MIDDLETOWN, CT

PIPE BRIDGE SYSTEM DETAILS I

PROJECT NUMBER: 14712.02
DESIGNED BY: IES
DRAWN BY: IES
DATE: FEBRUARY 23, 2016

SHEET NUMBER:
S-9.1

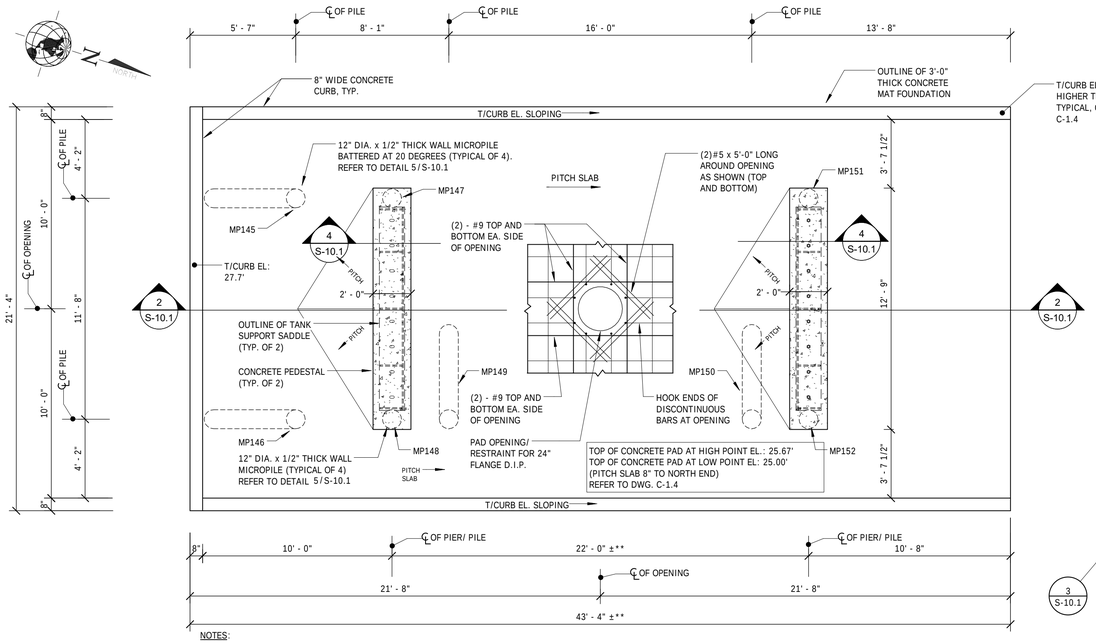

NOTES:

1. ** DENOTES G.C. TO COORDINATE FINAL DIMENSIONS W/ SURGE TANK MANUFACTURER.

2. REFER TO DRAWING C-1.4 FOR PUMP STATION EXTERIOR GRADING.

3. REFER TO DRAWING C-1.5 FOR PUMP STATION EXTERIOR PIPING.

4. SURGE TANK TO BE INSULATED AND HEAT TRACED AS SPECIFIED IN SECTION 13965. NOT SHOWN FOR CLARITY. CONTRACTOR TO COORDINATE ALL FITTINGS AND APPURTENANCES TO PENETRATE INSULATION TO ALLOW UNIMPEDED VISIBILTY, OPERATION AND MAINTENANCE.

5. PEDESTAL DIMENSIONS MAY BE MODIFIED DEPENDING ON FINAL TANK SELECTION, G.C. TO COORDINATE.

6. T/CURB DENOTES TOP OF CURB

7. MP... DENOTES MICRO PILE NUMBER LOCATION

1 S-10.1 SURGE TANK FOUNDATION PLAN

Scale: 1/4" = 1'-0"

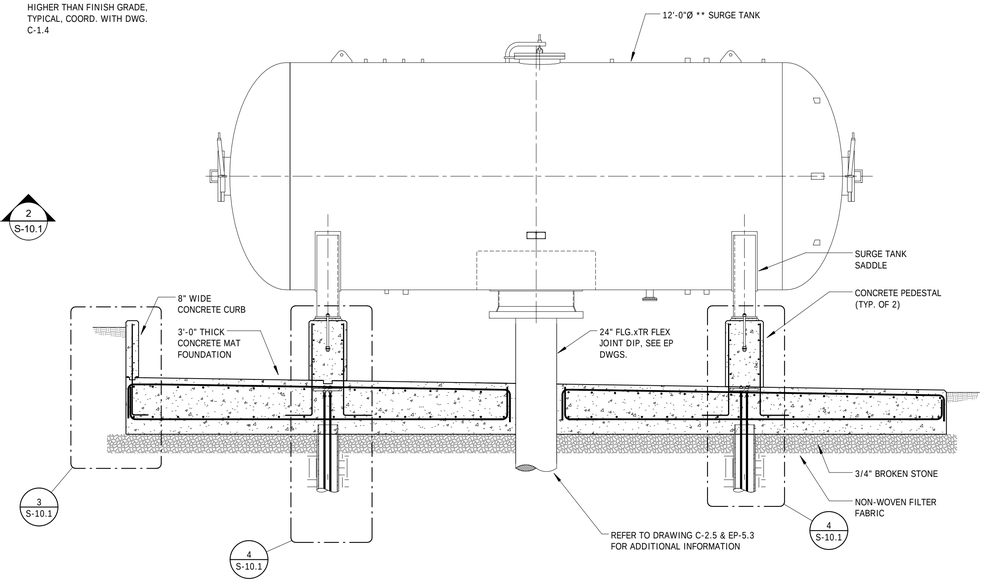

2 S-10.1 SECTION AT SURGE TANK

Scale: 1/4" = 1'-0"

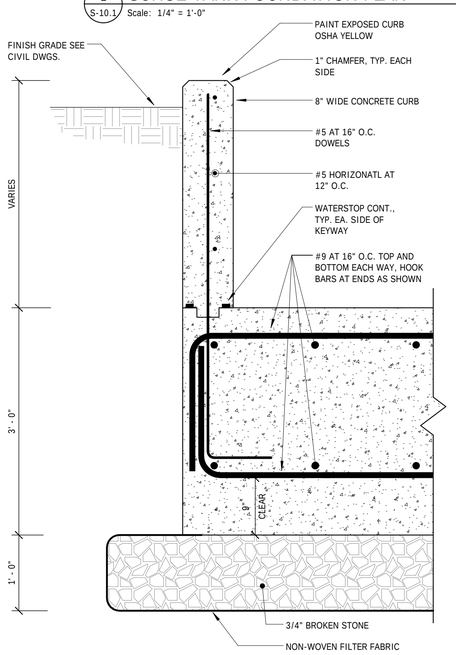

3 S-10.1 TYP. CONCRETE CURB AT SURGE TANK PAD

Scale: 1" = 1'-0"

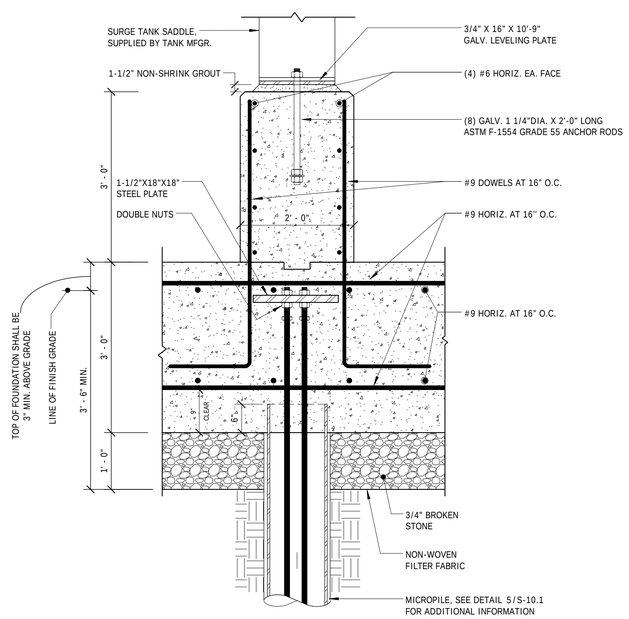

4 S-10.1 SECTION AT SURGE TANK CONCRETE PEDESTAL

Scale: 3/4" = 1'-0"

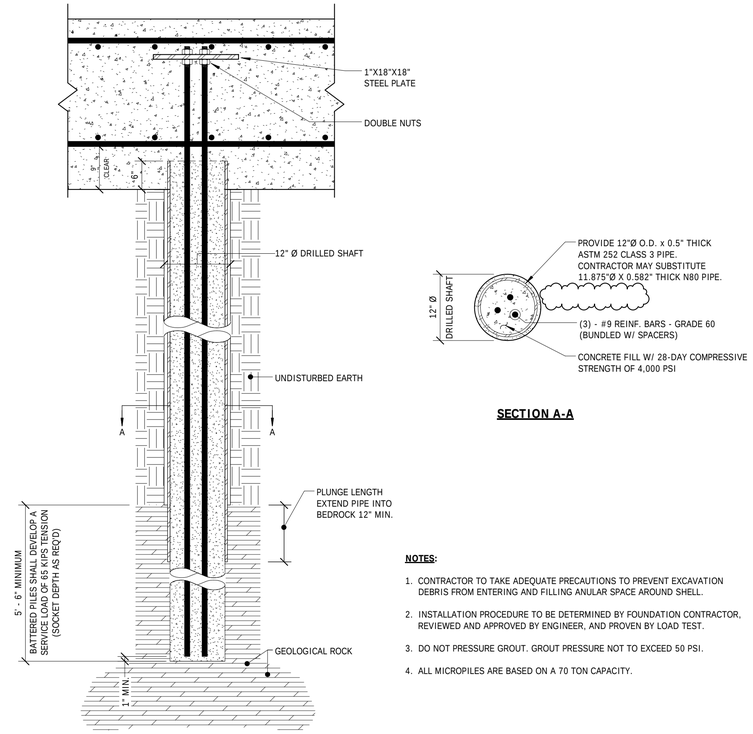

NOTES:

1. CONTRACTOR TO TAKE ADEQUATE PRECAUTIONS TO PREVENT EXCAVATION DEBRIS FROM ENTERING AND FILLING ANULAR SPACE AROUND SHELL.
2. INSTALLATION PROCEDURE TO BE DETERMINED BY FOUNDATION CONTRACTOR, REVIEWED AND APPROVED BY ENGINEER, AND PROVEN BY LOAD TEST.
3. DO NOT PRESSURE GROUT. GROUT PRESSURE NOT TO EXCEED 50 PSI.
4. ALL MICROPILES ARE BASED ON A 70 TON CAPACITY.

5 S-10.1 TYPICAL MICROPILE DETAIL AT SURGE TANK

Scale: 3/4" = 1'-0"

CDR MAGUIRE
2080 Silas Deane Highway
Rocky Hill, Connecticut
TEL. (860) 563-3158
www.cdrmaguire.com

LANDMARK ARCHITECTS, P.C.
DESIGN / RESTORE / BUILD
64 Thompson Street, Suite A105
East Haven, CT 06513
phone: 203-468-2441
www.landmarkarch.com

Innovative Engineering Services, LLC
Consulting Engineers
64 Thompson Street, Suite A101
East Haven, CT 06513
Tel: 203.467.4370 Fax: 203.468.6172
Web: www.iesllc.biz

REVISIONS

Number	Description	Date
1	ADDRESS DEEP REVIEW	5/6/2016
2	BID ADDENDUM 3	7/19/2016

FRANCIS T. PATNAUDE INTER-MUNICIPAL PUMPING STATION

MIDDLETOWN, CT

SURGE TANK FOUNDATION PLAN & DETAILS

PROJECT NUMBER: 14712.02
DESIGNED BY: IES
DRAWN BY: IES
DATE: FEBRUARY 23, 2016

SHEET NUMBER:

S-10.1

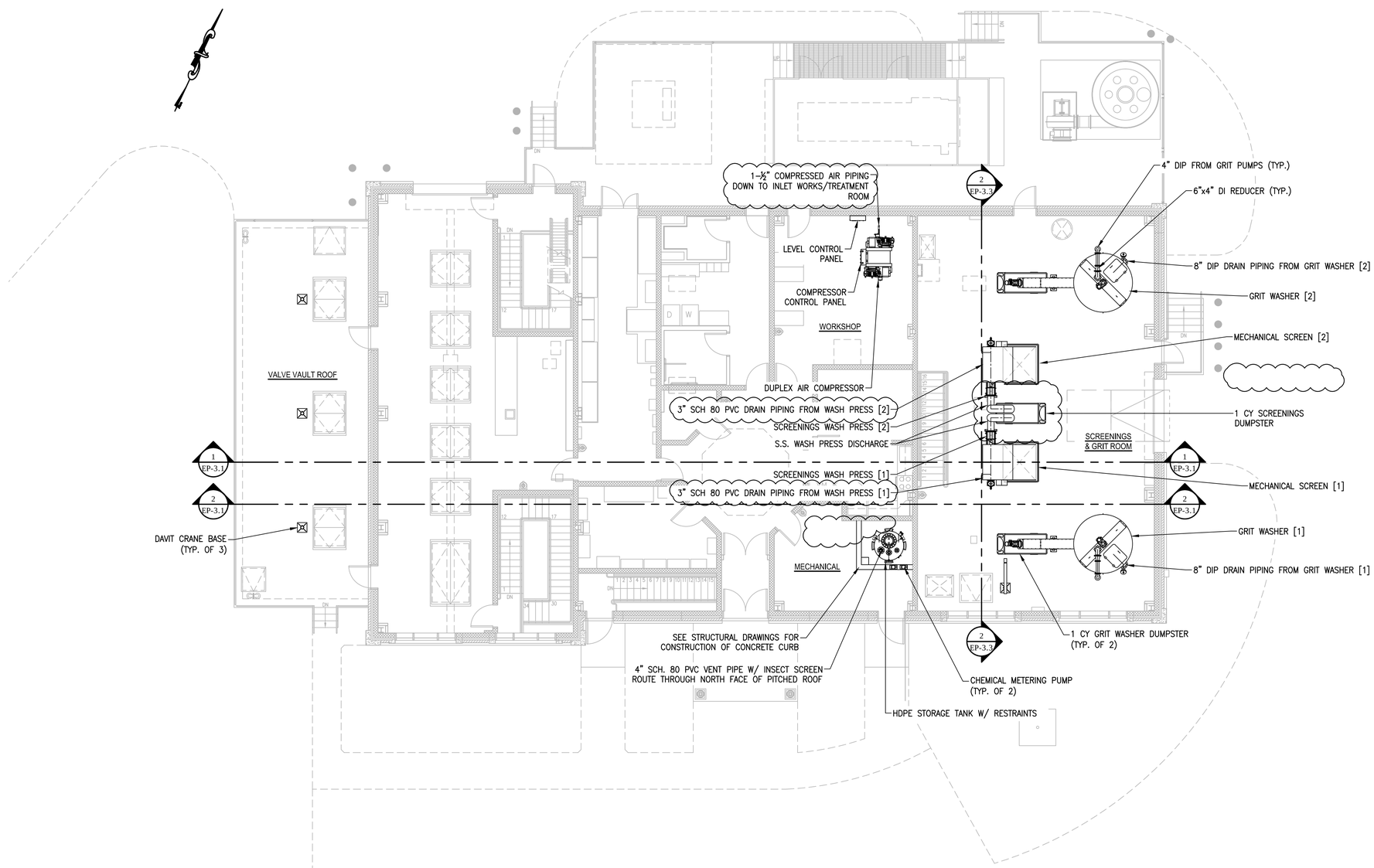

GROUND LEVEL PLAN

Scale: 1/8" = 1'-0"

CDR MAGUIRE

2080 Silas Deane Highway
Rocky Hill, Connecticut
TEL. (860) 563-3158
www.cdrmaguire.com

REVISIONS

Number	Description	Date
1	ADDRESS DEEP REVIEW	5/6/2016
2	BID ADDENDUM 2	7/19/2016

FRANCIS T. PATNAUDE INTER-MUNICIPAL PUMPING STATION

MIDDLETOWN, CT

PROCESS E□UIPMENT AND PIPING GROUND LEVEL PLAN

PROJECT NUMBER: 14712

DESIGNED BY: TJC

DRAWN BY: TJC

DATE: FEBRUARY 23, 2016

SHEET NUMBER:

EP-1.1

DRAWING FILE: C:\Users\TJcovi\Desktop\Middletown\WATER\PROCESS DRAWINGS\Rev-Ind\14712-02ep-11 (REBID).dwg PLOTTED: Jul 18,2016-12:23pm BY: Tom.Covill

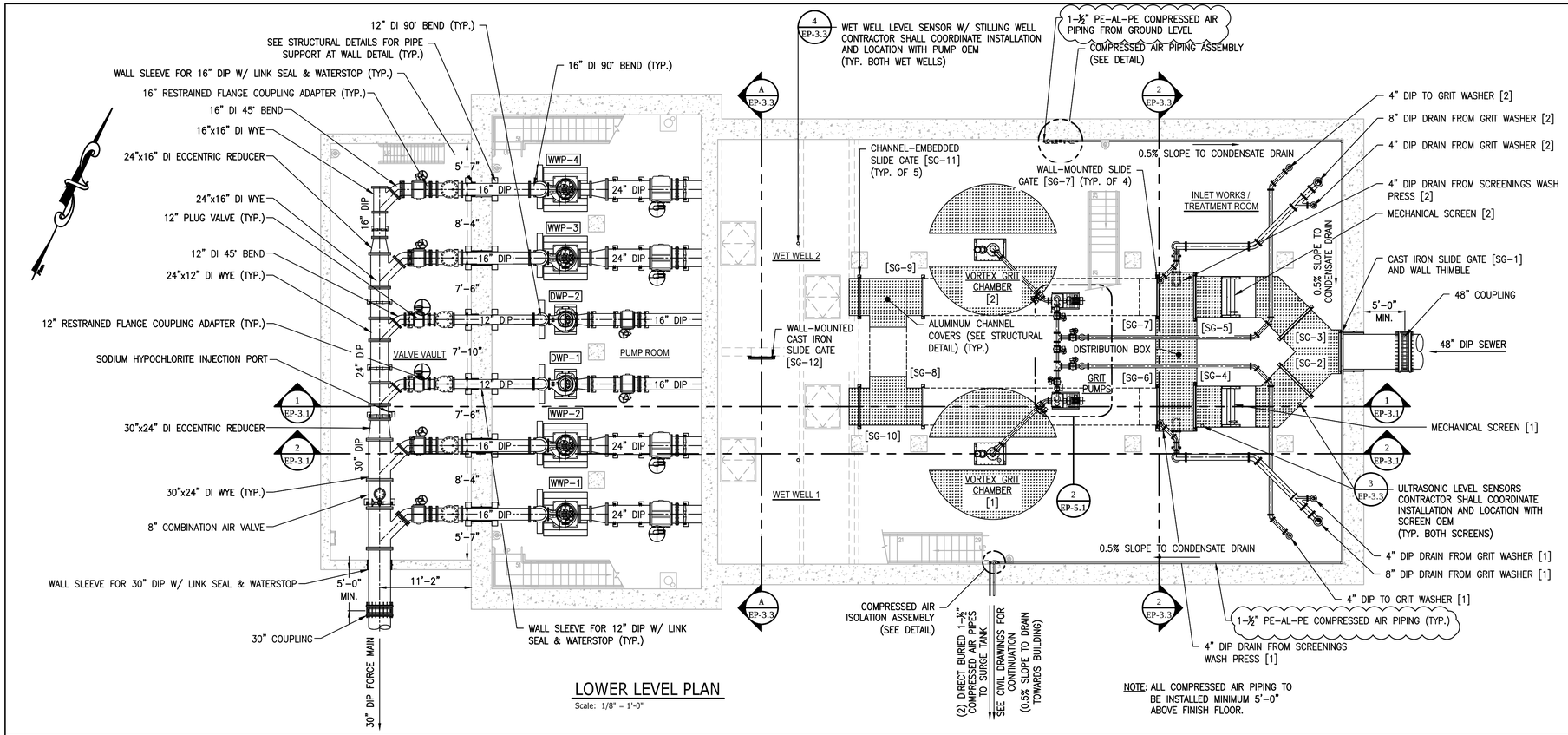

LOWER LEVEL PLAN

Scale: 1/8" = 1'-0"

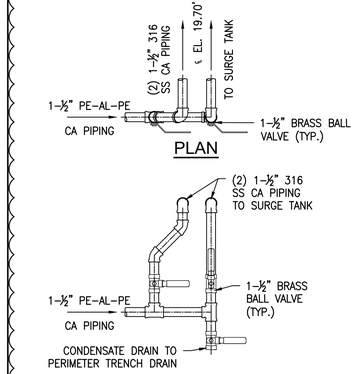

COMPRESSED AIR ISOLATION ASSEMBLY

N.T.S.

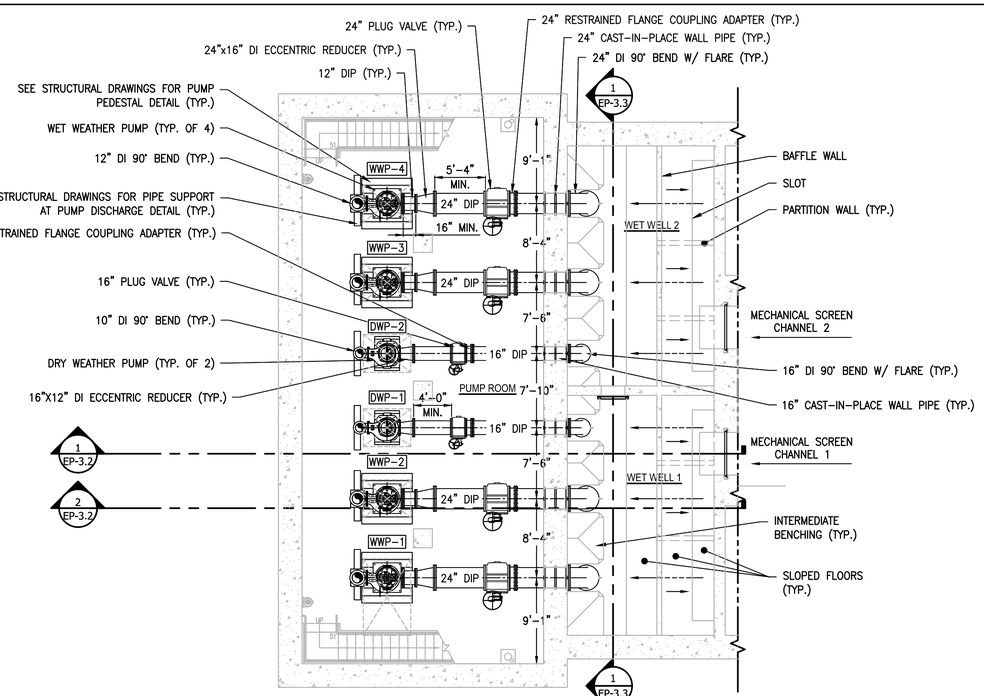

NOTE: SEE STRUCTURAL DRAWINGS FOR CONSTRUCTION OF WET WELL BAFFLE WALL, SLOPED FLOORS, GROUT PRISMS, AND BENCHING.

PUMP ROOM & WET WELL PLAN

Scale: 1/8" = 1'-0"

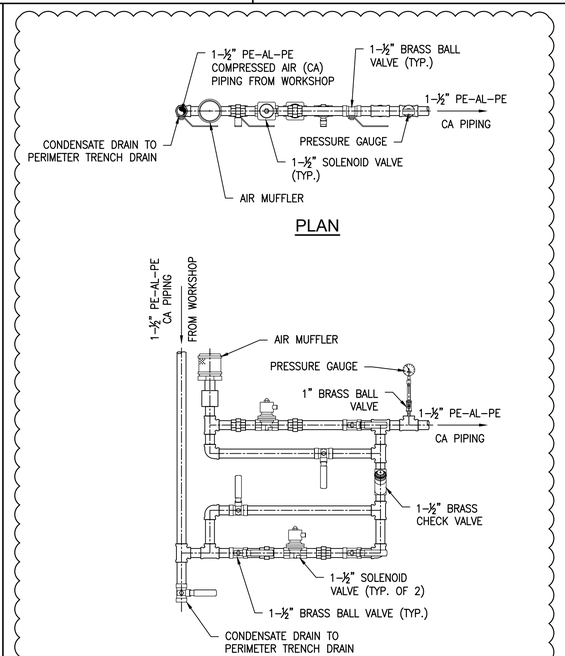

COMPRESSED AIR PIPING ASSEMBLY

N.T.S.

CDR MAGUIRE
2080 Silas Deane Highway
Rocky Hill, Connecticut
TEL. (860) 563-3158
www.cdrmaguire.com

REVISIONS

Number	Description	Date
1	ADDRESS DEEP REVIEW	5/6/2016
2	BID ADDENDUM 2	7/19/2016

FRANCIS T. PATNAUDE INTER-MUNICIPAL PUMPING STATION

MIDDLETOWN, CT

PROCESS E□UIPMENT AND PIPING LOWER LEVEL, PUMP ROOM AND WET WELL PLANS

PROJECT NUMBER:	14712
DESIGNED BY:	TJC
DRAWN BY:	TJC
DATE:	FEBRUARY 23, 2016

SHEET NUMBER:

EP-1.2

DRAWING FILE: C:\Users\TCovil\Desktop\Middletown\WATR\PROCESS DRAWINGS\Rev-Bid\14712.02ep-1.2 (REBID).dwg PLOTTED: Jul 18,2016-12:42pm BY: Tom.Covill

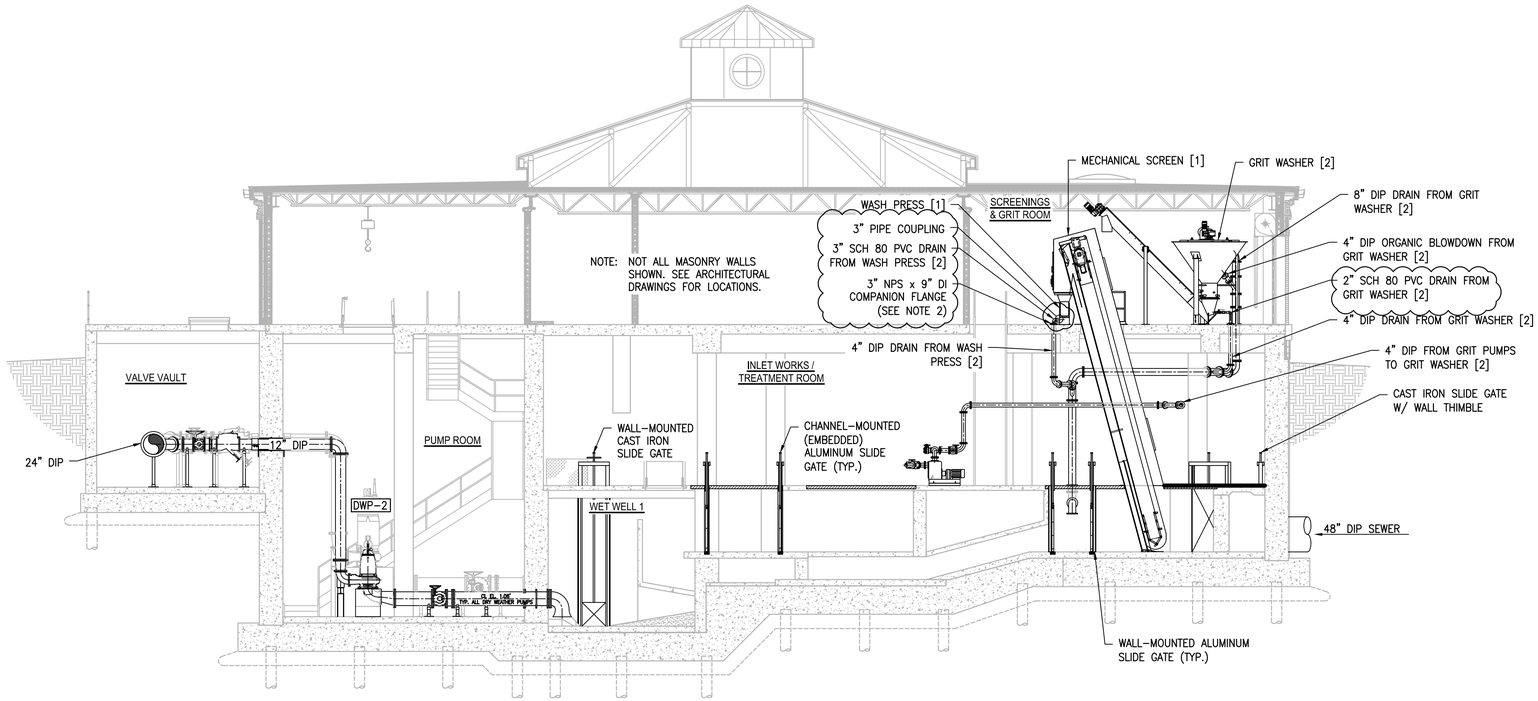

1 SECTION THROUGH BUILDING
Scale: 1/8" = 1'-0"

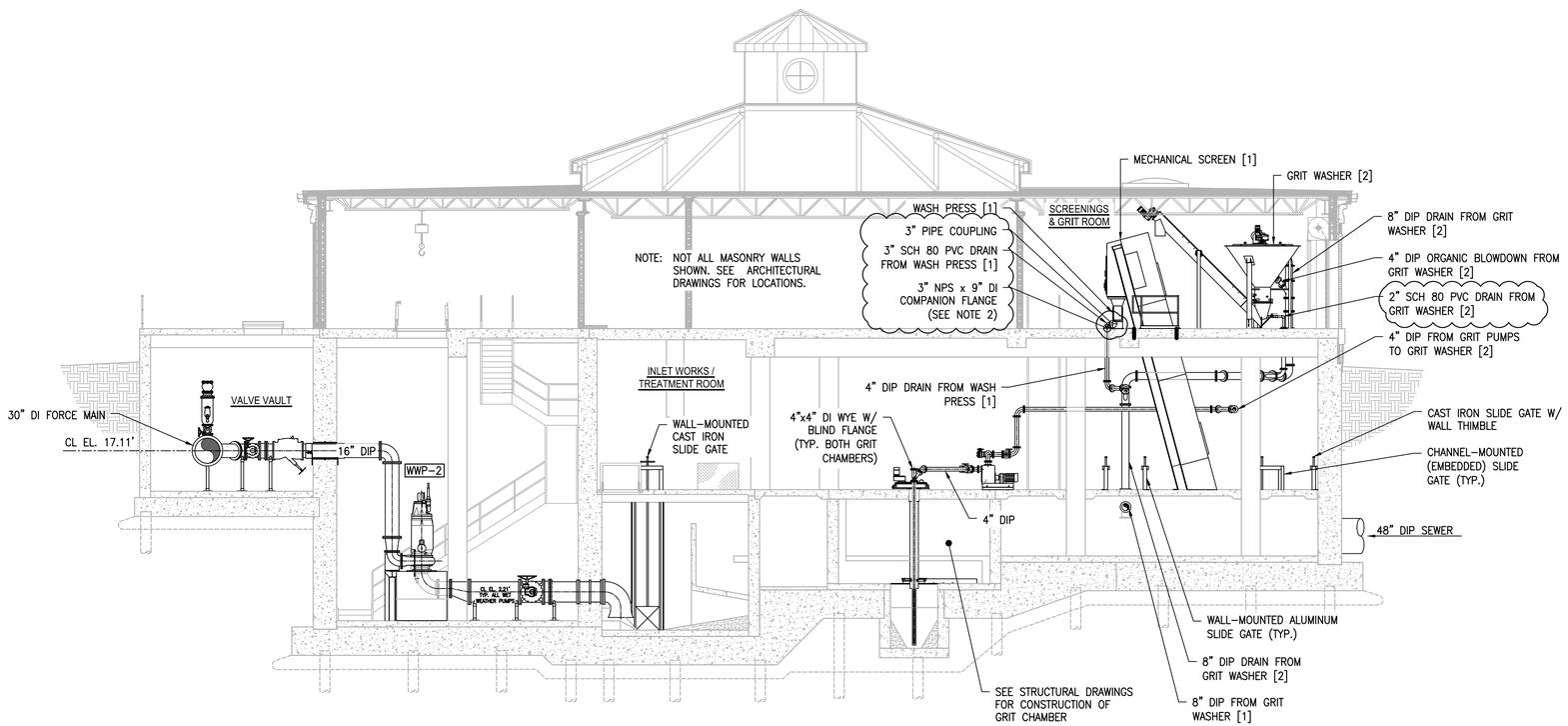

2 SECTION THROUGH BUILDING
Scale: 1/8" = 1'-0"

NOTES:

1. CONFIRM WITH MFR. FOR GRIT WASHER INLET, GRIT WASHER DRAIN, AND WASH PRESS DRAIN SIZES.
2. COMPANION FLANGE DIMENSIONS REFER TO THREADED SIZE AND FLANGE DIAMETER, RESPECTIVELY.

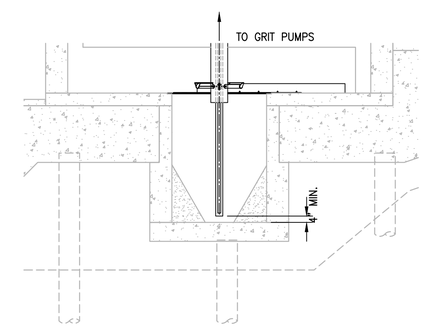

NOTE: SEE STRUCTURAL DRAWINGS FOR CONSTRUCTION OF GRIT CHAMBER.

SECTION AT BOTTOM OF GRIT CHAMBER
Scale: 1/4" = 1'-0"

CDR MAGUIRE
2080 Silas Deane Highway
Rocky Hill, Connecticut
TEL. (860) 563-3158
www.cdrmaguire.com

REVISIONS

Number	Description	Date
1	ADDRESS DEEP REVIEW	5/6/2016
2	BID ADDENDUM 2	7/19/2016

FRANCIS T. PATNAUDE INTER-MUNICIPAL PUMPING STATION

MIDDLETOWN, CT

PROCESS EQUIPMENT AND PIPING SECTIONS I

PROJECT NUMBER: 14712
DESIGNED BY: TJC
DRAWN BY: TJC
DATE: FEBRUARY 23, 2016

SHEET NUMBER:

EP-3.1

DRAWING FILE: C:\Users\TCoyl\Desktop\Middletown\WATER\PROCESS DRAWINGS\Bw-Ind\14712.02wp-3.1 [REBID].dwg PLOTTED: Jul 18,2016-12:57pm BY: Tom Coyll

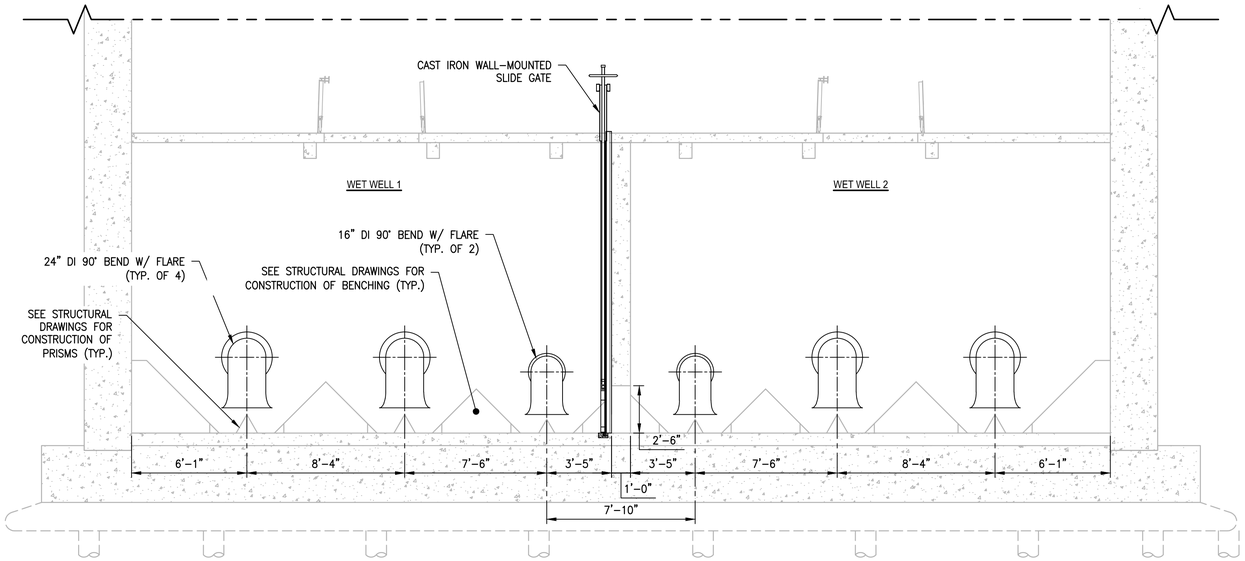

1 BUILDING SECTION THROUGH WET WELL
Scale: 1/4" = 1'-0"

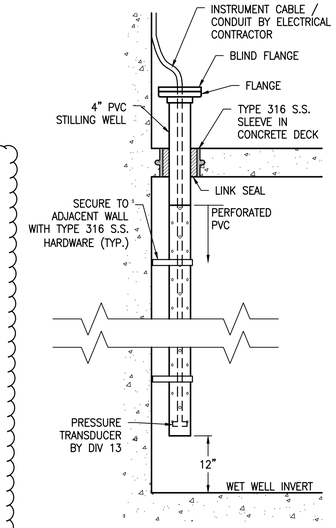

4 STILLING WELL FOR WET WELL LEVEL SENSORS
N.T.S.

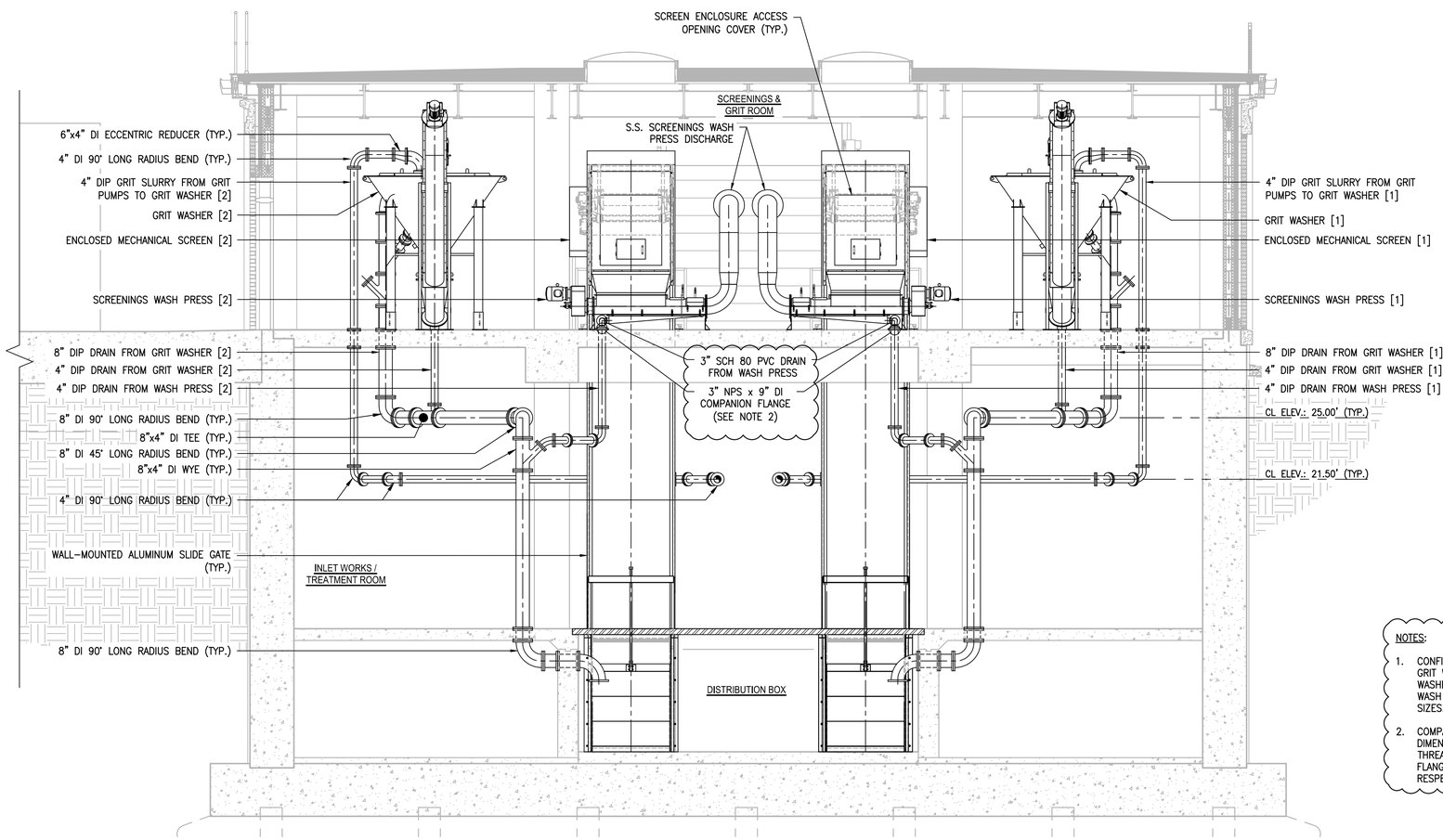

2 BUILDING SECTION THROUGH DISTRIBUTION BOX
Scale: 1/4" = 1'-0"

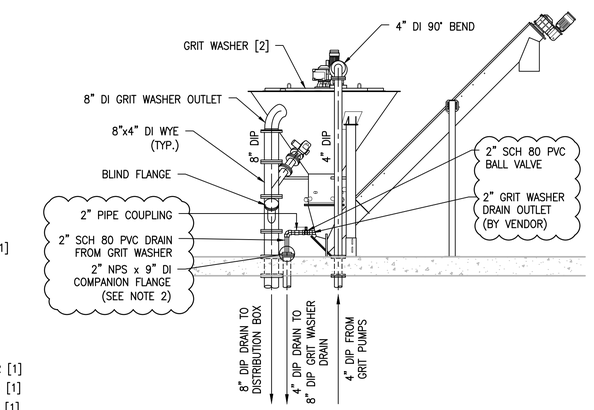

NOTES:

1. CONFIRM WITH MFR. FOR GRIT WASHER INLET, GRIT WASHER DRAIN, AND WASH PRESS DRAIN SIZES.
2. COMPANION FLANGE DIMENSIONS REFER TO THREADED SIZE AND FLANGE DIAMETER, RESPECTIVELY.

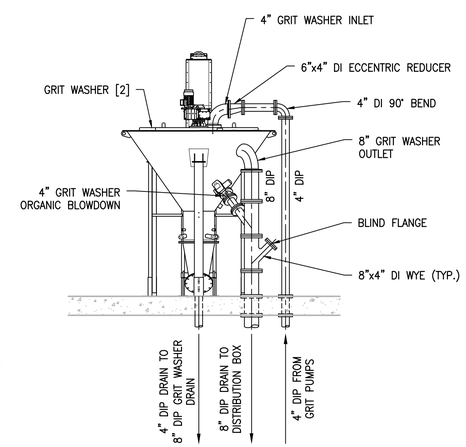

5 TYPICAL GRIT WASHER PROFILE
Scale: 1/4" = 1'-0"

CDR MAGUIRE
2080 Silas Deane Highway
Rocky Hill, Connecticut
TEL. (860) 563-3158
www.cdrmaguire.com

REVISIONS

Number	Description	Date
1	ADDRESS DEEP REVIEW	5/6/2016
2	BID ADDENDUM 2	7/19/2016

FRANCIS T. PATNAUDE INTER-MUNICIPAL PUMPING STATION

MIDDLETOWN, CT

PROCESS EQUIPMENT AND PIPING SECTIONS III

PROJECT NUMBER: 14712
DESIGNED BY: TJC
DRAWN BY: TJC
DATE: FEBRUARY 23, 2016

SHEET NUMBER:

EP-3.3

DRAWING FILE: C:\Users\Tcox\Desktop\Middletown\WATER\PROCESS DRAWINGS\Re-bid\14712.02ep-3.3 [REBID].dwg PLOTTED: Jul 18,2016-12:41pm BY: Tom.Covill

VALVE SYMBOLS

- GATE VALVE
- GLOBE VALVE
- BALL VALVE
- PLUG VALVE
- BUTTERFLY VALVE
- DIAPHRAGM VALVE
- PINCH VALVE
- NEEDLE VALVE
- 3-WAY VALVE VALVE TYPE VARIES
- CHECK VALVE
- DOUBLE LEAF CHECK VALVE
- BALL CHECK VALVE

RELIEF DEVICES

- RELIEF VALVE (ANGLE PATTERN)
- RELIEF VALVE (STRAIGHT THROUGH PATTERN)
- VAC PRESS COMBINATION RELIEF VALVE
- RUPTURE DISC

SELF-ACTING REGULATORS

- PRESSURE REDUCING
- BACK PRESSURE

VALVE ACTUATORS

- DIAPHRAGM
- M ELECTRIC MOTOR
- S SOLENOID
- DOUBLE-ACTING CYLINDER

PIPING SYMBOLS

- Y-STRAINER
- BASKET STRAINER
- BLIND FLANGE
- WELDED CAP
- THREADED CAP
- CONCENTRIC REDUCER
- ECCENTRIC REDUCER
- FUNNEL OR DRAIN
- CAM LEVER COUPLING WITH CAP/PLUG & CHAIN
- CALIBRATION COLUMN
- PULSATION DAMPENER
- CHEMICAL INJECTOR
- F CARTRIDGE FILTER
- BUTTERFLY DAMPER
- FLEXIBLE HOSE
- EXPANSION JOINT
- COMBINATION AIR RELEASE VALVE 2
- FILTER OR SCREEN
- PI = PI GAUGE ASSEMBLY W/TEST CONNECTION
- PI = PI GAUGE ASSEMBLY W/TEST CONNECTION & DIAPHRAGM SEAL

IN-LINE INSTRUMENTS

- FE NOZZLE
- FE ORIFICE
- FE PITOT
- FE R RESISTANCE TEMPERATURE DIFFERENTIAL
- FE M MAGNETIC ELEMENT
- FE VENTURI
- FE AVERAGING PITOT
- FE PARSHALL FLUME
- FE VORTEX SHREDDING
- FE POSITIVE DISPLACEMENT
- FE TARGET
- FE TURBINE
- FE SONIC
- FE ROTOMETER

GENERAL INSTRUMENT OR FUNCTION SYMBOLS

	FIELD MOUNTED	PRIMARY LOCATION ACCESSIBLE TO OPERATOR	PRIMARY LOCATION INACCESSIBLE TO OPERATOR	AUXILIARY LOCATION ACCESSIBLE TO OPERATOR	HARDWARE INTERLOCK
DISCRETE INSTRUMENTS					
SHARED DISPLAY SHARED CONTROL					DCS "SOFT" INTERLOCK
COMPUTER FUNCTION					
PROGRAMMABLE LOGIC CONTROL					

MECHANICAL EQUIPMENT

- CENTRIFUGAL PUMP
- CHEMICAL METERING PUMP
- SUMP PUMP
- VERTICAL TURBINE PUMP
- CENTRIFUGAL BLOWER
- MIXER
- MECHANICAL SCREEN
- M WASHING PRESS
- STATIC MIXER
- DEMISTING FILTER
- SLIDE GATE
- ULTRA SONIC LEVEL TRANSMITTER
- SUBMERSIBLE PRESSURE SENSOR
- M GRIT WASHER
- M VORTEX GRIT CHAMBER

CDR MAGUIRE
2080 Silas Deane Highway
Rocky Hill, Connecticut
TEL. (860) 563-3158
www.cdrmaguire.com

Tighe&Bond
Consulting Engineers
www.tighebond.com

REVISIONS

Number	Description	Date
1	ADDRESS DEEP REVIEW	5/6/2016
2	BID ADDENDUM 2	7/12/2016

FRANCIS T. PATNAUDE INTER-MUNICIPAL PUMPING STATION

MIDDLETOWN, CT

PIPING AND INSTRUMENTATION LEGEND SYMBOLS

PROJECT NUMBER: 14712
DESIGNED BY: FAM
DRAWN BY: REJ
DATE: FEBRUARY 23, 2016

SHEET NUMBER:

PI-0.1

DRAWING FILE: Q:\Projects\W\W1323\PI-0.1.dwg PLOTTED: Jul 13,2016-7:32am BY: tmp

TYPICAL VARIABLE LETTER COMBINATIONS

FIRST LETTERS	INITIATING OR MEASURED VARIABLE	CONTROLLERS				READOUT DEVICES		SWITCHES AND ALARM DEVICES			TRANSMITTERS			SOLENOIDS, RELAYS, COMPUTING DEVICES	PRIMARY ELEMENT	TEST POINT	WELL OR PROBE	VIEWING DEVICE, GLASS	SAFETY DEVICE	FINAL ELEMENT	SUCEEDING LETTERS	
		RECORDING	INDICATING	BLIND	SELF-ACTUATED CONTROL VALVES	RECORDING	INDICATING	HIGH	LOW	COMB	RECORDING	INDICATING	BLIND								VALUE	DESCRIPTION
A	ANALYSIS	ARC	AIC	AC	–	AR	AI	ASH	ASL	ASHL	ART	AIT	AT	AY	AE	AP	AW	–	–	AZ	A	ALARM
B	BURNER/COMBUSTION	BRC	BIC	BC	–	BR	BI	BSH	BSL	BSHL	BRT	BIT	BT	BY	BE	–	BW	BG	–	BZ	B	–
C	USER'S CHOICE	–	–	–	–	–	–	–	–	–	–	–	–	–	–	–	–	–	–	–	C	CLOSED
D	USER'S CHOICE	–	–	–	–	–	–	–	–	–	–	–	–	–	–	–	–	–	–	–	D	–
E	VOLTAGE	ERC	EIC	EC	–	ER	EI	ESH	ESL	ESHL	ERT	EIT	ET	EY	EE	–	–	–	–	EZ	E	–
F	FLOW RATE	FRC	FIC	FC	FCV	FR	FI	FSH	FSL	FSHL	FRT	FIT	FT	FY	FE	FP	–	FG	–	FZ	F	–
FQ	FLOW QUANTITY	FQRC	FQIC	–	–	FQR	FQI	FQSH	FQSL	FQSHL	–	FQIT	FQT	FQY	FQE	–	–	–	–	FQZ	–	–
FF	FLOW RATIO	FFRC	FFIC	FFC	–	FFR	FFI	FFSH	FFSL	FFSHL	–	–	–	–	–	–	–	–	–	FFZ	–	–
G	USER'S CHOICE	–	–	–	–	–	–	–	–	–	–	–	–	–	–	–	–	–	–	–	G	–
H	HAND	–	HIC	HC	–	–	–	–	–	–	–	–	–	–	–	–	–	–	–	–	H	HIGH
I	CURRENT	IRC	IIC	–	–	IR	II	ISH	ISL	ISHL	IRT	IIT	IT	IY	IE	–	–	–	–	IZ	HH	HIGH HIGH
J	POWER	JRC	JIC	–	–	JR	JI	JSH	JSL	JSHL	JRT	JIT	JT	JY	JE	–	–	–	–	JZ	I	–
K	TIME	KRC	KIC	KC	KCV	KR	KI	KSH	KSL	KSHL	KRT	KIT	KT	KY	KE	–	–	–	–	KZ	J	–
L	LEVEL	LRC	LIC	LC	LCV	LR	LI	LSH	LSL	LSHL	LRT	LIT	LT	LY	LE	–	LW	LG	–	LZ	K	–
M	MOISTURE	–	–	–	–	–	–	MS	–	–	–	–	–	–	ME	–	–	–	–	–	L	LOW
N	USER'S CHOICE	–	–	–	–	–	–	–	–	–	–	–	–	–	–	–	–	–	–	–	LL	LOW LOW
O	USER'S CHOICE	–	–	–	–	–	–	–	–	–	–	–	–	–	–	–	–	–	–	–	M	MIDDLE
P	PRESSURE/VACUUM	PRC	PIC	PC	PCV	PR	PI	PSH	PSL	PSHL	PRT	PIT	PT	PY	PE	PP	–	–	PSE	PZ	N	–
PD	PRESSURE DIFFERENTIAL	PDRC	PDIC	PDC	PDCV	PDR	PDI	PDSH	PDSL	PDSHL	PDRT	PDIT	PDT	PDY	PDE	PDP	–	–	–	PDZ	O	OPEN
Q	QUANTITY	QRC	QIC	–	–	QR	QI	QSH	QSL	QSHL	QRT	QIT	QT	QY	QE	–	RW	–	–	QZ	P	–
R	RADIATION	RRC	RIC	RC	–	RR	RI	RSH	RSL	RSHL	RRT	RIT	RT	RY	RE	–	–	–	–	RZ	Q	–
S	SPEED/FREQUENCY	SRC	SIC	SC	SCV	SR	SI	SSH	SSL	SSHL	SRT	SIT	ST	SY	SE	–	–	–	–	SZ	R	–
T	TEMPERATURE	TRC	TIC	TC	TCV	TR	TI	TSH	TSL	TSHL	TRT	TIT	TT	TY	TE	TP	TPW	–	TSE	TZ	S	–
TD	TEMPERATURE DIFFERENTIAL	TDRC	TDIC	TDC	TDCV	TDR	TDI	TDSH	TDSL	TDSHL	TDRT	TDIT	TDT	TDY	TDE	TDP	TDPW	–	–	TDZ	T	–
U	MULTIVARIABLE	–	–	–	–	UR	UI	–	–	–	–	–	–	–	–	–	–	–	–	–	U	–
V	VIBRATION/MACHINERY ANALYSIS	–	–	–	–	VR	VI	VSH	VSL	VSHL	VRT	VIT	VT	VY	VE	–	–	–	–	VZ	V	–
W	WEIGHT/FORCE	WRC	WIC	WC	WCV	WR	WI	WSH	WSL	WSHL	WRT	WIT	WT	WY	WE	–	–	–	–	WZ	W	–
WD	WEIGHT/FORCE DIFFERENTIAL	WDRC	WDIC	WDC	WDCV	WDR	WDI	WDSH	WDSL	WDSHL	WDRT	WDIT	WDT	WDY	WDE	–	–	–	–	WDZ	–	–
X	UNCLASSIFIED	–	–	–	–	–	–	–	–	–	–	–	–	–	–	–	–	–	–	–	X	–
Y	EVENT/STATE/PRESENCE	–	YIC	YC	–	YR	YI	YSH	YSL	YSHL	YRT	YIT	YT	YY	YE	–	–	–	–	YZ	Y	–
Z	POSITION/DIMENSION	ZRC	ZIC	ZC	ZCV	ZR	ZI	ZSH	ZSL	ZSHL	ZRT	ZIT	ZT	ZY	ZE	–	–	–	–	ZZ	Z	–
ZD	GAUGING/DEVIATION	ZDRC	ZDIC	ZDC	ZDCV	ZDR	ZDI	ZDSH	ZDSL	ZDSHL	ZDRT	ZDIT	ZDT	ZDY	ZDE	–	–	–	–	ZDZ	–	–

NOTE: THIS TABLE IS NOT ALL-INCLUSIVE.

LINE CODING

XX"-PVC-INFLT

- FLUID CODE
- PIPE MATERIAL
- NOMINAL PIPE SIZE

PIPE MATERIAL ABBREVIATION

BR	BRONZE
CI	CAST IRON
CMP	COMPOSITE PE-AL-PE (2)
CPVC	CHLORINATED POLYVINYL CHLORIDE
CS	CARBON STEEL (BLACK STEEL)
CU	COPPER
DI	DUCTILE IRON
DIGL	DUCTILE IRON GLASS LINED
FRP	FIBERGLASS
GS	GALVANIZED STEEL
PP	POLYPROPYLENE
PVC	POLYVINYL CHLORIDE
RH	RUBBER HOSE
SS	STAINLESS STEEL
TF	TEFLON

EQUIPMENT NUMBERING

XX00 – 0000 (EXAMPLE)

- SEQUENTIAL EQUIPMENT NUMBER
- P&ID DRAWING NO.
- EQUIPMENT TYPE

FLUID CODE

BYPS	BYPASS
CA	COMPRESSED AIR
CDS	CHEMICAL DOSING
EFFL	EFFLUENT
INFLT	INFLUENT
MAG	MAGNETITE BALLAST
OC	ODOR CONTROL
OVRFL	OVERFLOW
PA	PROCESS AIR
PRMT	PERMEATE
PW	PLANT WATER
RAS	RETURN ACTIVATED SLUDGE
RECYC	RECYCLE
RNS	RINSE
SCUM	SCUM
SEPT	SEPTAGE
WAS	WASTE ACTIVATED SLUDGE
WS	WASTE SLUDGE

INSTRUMENT NUMBERING

0000 (EXAMPLE)

- P&ID DRAWING NO.
- SEQUENTIAL INSTRUMENT NO.

LINE SYMBOLS

- EXISTING PROCESS LINE
- MAJOR PROCESS LINE
- MINOR PROCESS LINE
- ELECTRICAL
- PLC TO SCADA COMMUNICATION
- PNEUMATIC SIGNAL
- HYDRAULIC SIGNAL
- INTERNAL SYSTEM LINE (SOFTWARE OR DATA)
- ELECTROMAGNETIC SIGNAL (GUIDED)
- ELECTROMAGNETIC SIGNAL (NOT GUIDED)
- HARDWIRED INTERLOCK
- A OR A — AUTOMATION INTERLOCK
- XX"-PVC-INFLT — LINE CODE
- DESCRIPTION 1 / DESCRIPTION 2 / DESCRIPTION 3 — PROCESS CONTINUATION
- DESCRIPTION 1 / DESCRIPTION 2 / DESCRIPTION 3 — PROCESS CONTINUATION WITH BACKFLOW

SCREEN TYPES

FS1	PERFORATED PLATE FINE SCREEN
FS2	MANUAL COARSE SCREEN
FS3	SCREENING CONVEYOR
FS4	GRIT CLASSIFIER

MIXER TYPES

M1	MIXER (RAPID)
M2	LOW SPEED MIXER (INVENT)
M3	RAIL MOUNTED SUBMERSIBLE MIXER
M4	JET MIXER/AERATOR

IN-LINE INSTRUMENT TYPES

LE1	NOZZLE
LE2	MAGNETIC ELEMENT
LE3	ORIFICE
LE4	VENTURI
LE5	PITOT
LE6	AVERAGING PITOT
LE7	VORTEX SHEDDING
LE8	TURBINE
LE9	POSITIVE DISPLACEMENT
LE10	SONIC
LE11	TARGET
LE12	ROTAMETER
LE13	RESISTANCE TEMPERATURE DIFFERENTIAL
LE14	MASS FLOW METER
LE15	VARIABLE

BLOWER TYPES

B1	REGENERATIVE
B2	PD (TRI-LOBE)
B3	PD (DUAL-LOBE)
B4	CENTRIFUGAL
B5	ROTARY SCREW COMPRESSOR

SPECIALTY ITEMS

SP1	FINE BUBBLE DIFFUSER
SP2	MEDIUM BUBBLE DIFFUSER
SP3	COARSE BUBBLE DIFFUSER
SP4	INVENT DIFFUSER
SP5	PARSHALL FLUME
SP6	ULTRASONIC LEVEL TRANSMITTER
SP7	SUBMERSIBLE PRESSURE TRANSMITTER
SP8	EXPANSION JOINT
SP9	CARBON ODOR CONTROL UNIT
SP10	BIOFILTER ODOR CONTROL UNIT
SP11	CHEMICAL SCRUBBER ODOR CONTROL UNIT
SP12	SHEAR MILL
SP13	RECOVERY DRUM
SP14	CHEMICAL FEED SKID
SP15	POLISHING MAGNET
SP16	STATIC MIXER
SP17	SPARGE RING

PUMP TYPES

P1	AIR LIFT PIMP
P2	SUBMERSIBLE PUMP
P3	CENTRIFUGAL SCREW PUMP
P4	CENTRIFUGAL PUMP
P5	PROGRESSIVE CAVITY PUMP
P6	PROPELLER PUMP
P7	PERISTALTIC (HOSE) PUMP
P8	POSITIVE DISPLACEMENT PUMP
P9	DIAPHRAGM PUMP
P10	SOLENOID METERING PUMP
P11	ROTARY LOBE PUMP

CDR MAGUIRE
2080 Silas Deane Highway
Rocky Hill, Connecticut
TEL. (860) 563-3158
www.cdrmaguire.com

Tighe&Bond
Consulting Engineers
www.tighebond.com

REVISIONS

Number	Description	Date
1	ADDRESS DEEP REVIEW	5/6/2016
2	BID ADDENDUM 2	7/12/2016

FRANCIS T. PATNAUDE INTER-MUNICIPAL PUMPING STATION

MIDDLETOWN, CT

PIPING AND INSTRUMENTATION LEGEND-CODE, NUMBERING, AND ABBREVIATIONS

PROJECT NUMBER: 14712
DESIGNED BY: FAM
DRAWN BY: REJ
DATE: FEBRUARY 23, 2016

SHEET NUMBER:

PI-0.2

DRAWING FILE: O:\Projects\W\W1325\PI-0.2.dwg PLOTTED: Jul 13,2016-7:42am BY: tmp

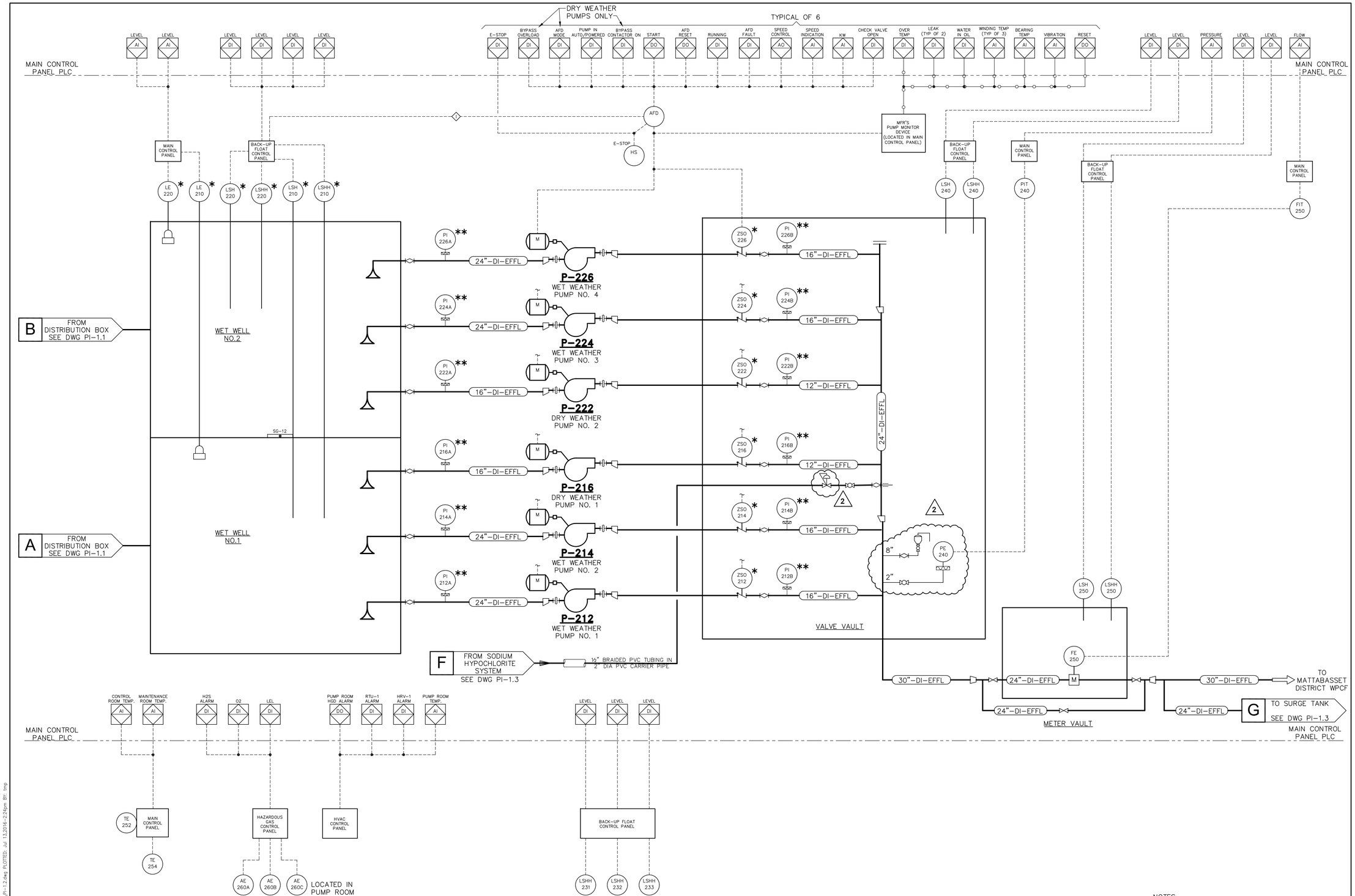

NOTES:

1. LIT-210, LIT-220, AND PIT-240 ARE LOCATED IN THE MAIN CONTROL PANEL.
2. INSTRUMENTS MARKED * FURNISHED UNDER DIVISION 11 OR 13 EQUIPMENT MANUFACTURER.
3. INSTRUMENTS MARKED ** FURNISHED UNDER DIVISION 15 OR 16.

CDR MAGUIRE
2080 Silas Deane Highway
Rocky Hill, Connecticut
TEL. (860) 563-3158
www.cdrmaguire.com

Tighe&Bond
Consulting Engineers
www.tighebond.com

REVISIONS

Number	Description	Date
1	ADDRESS DEEP REVIEW	5/6/2016
2	BID ADDENDUM 2	7/12/2016

FRANCIS T. PATNAUDE INTER-MUNICIPAL PUMPING STATION

MIDDLETOWN, CT

P&ID PUMPS & FORCE MAINS

PROJECT NUMBER: 14712
DESIGNED BY: FAM
DRAWN BY: REJ
DATE: FEBRUARY 23, 2016

SHEET NUMBER:

PI-1.2

DRAWING FILE: O:\Projects\M\M1325\PI-1.2.dwg PLOTTED: Jul 13,2016-2:24pm BY: tmp

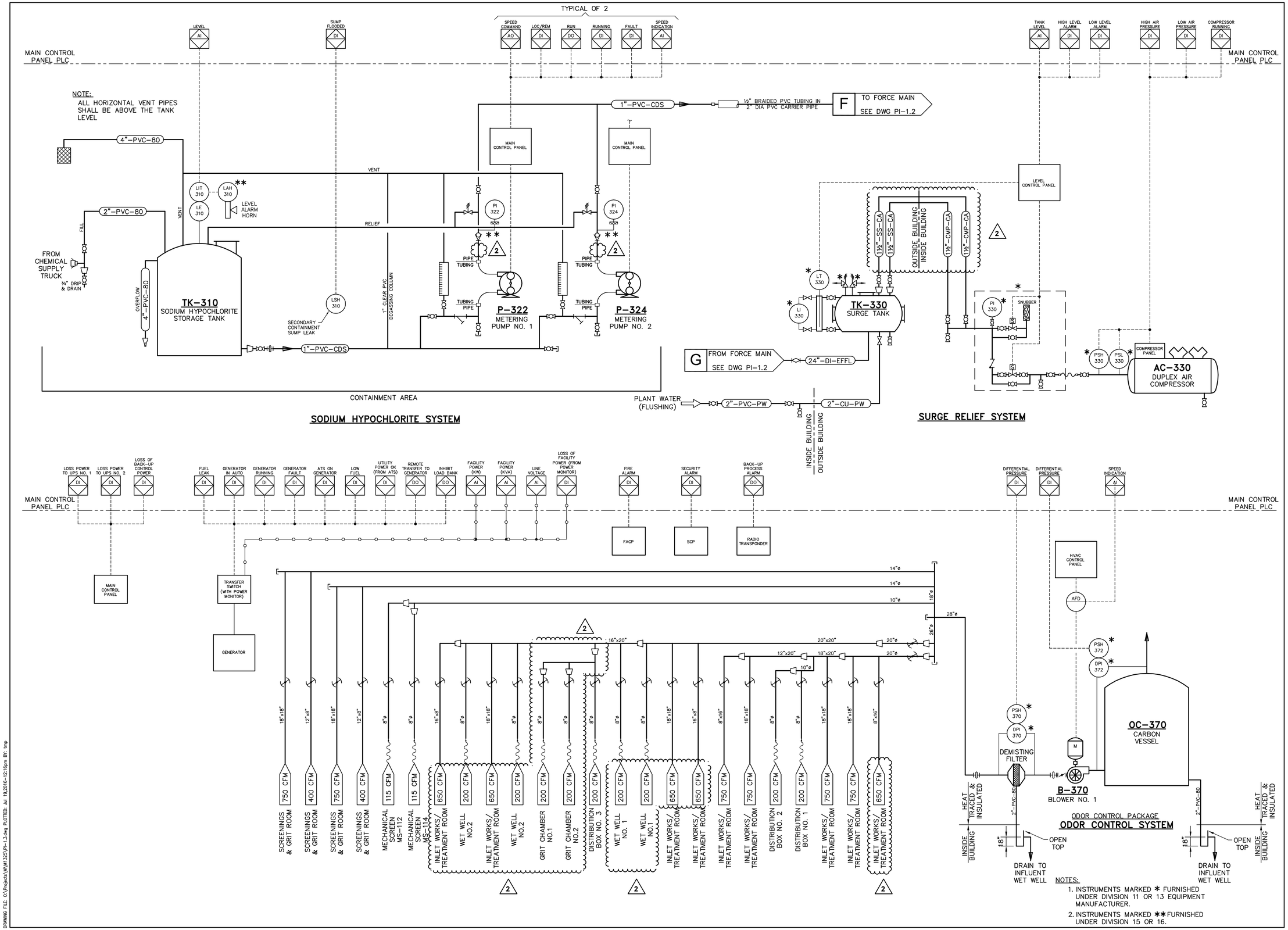

CDR MAGUIRE
2080 Silas Deane Highway
Rocky Hill, Connecticut
TEL. (860) 563-3158
www.cdrmaguire.com

Tighe&Bond
Consulting Engineers
www.tighebond.com

REVISIONS

Number	Description	Date
1	ADDRESS DEEP REVIEW	5/6/2016
2	BID ADDENDUM 2	7/12/2016

FRANCIS T. PATNAUDE INTER-MUNICIPAL PUMPING STATION

MIDDLETOWN, CT

P&ID
OTHER SYSTEMS

PROJECT NUMBER: 14712
DESIGNED BY: FAM
DRAWN BY: REJ
DATE: FEBRUARY 23, 2016

SHEET NUMBER:

PI-1.3

DRAWING FILE: O:\Projects\M\M1325\PI-1.3.dwg PLOTTED: Jul 19,2016-12:16pm BY: tmp

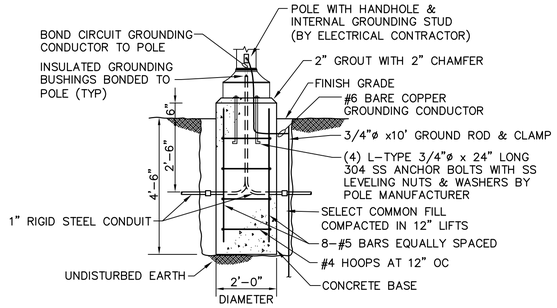

LIGHT POLE BASE

DETAIL	1
NO SCALE	–

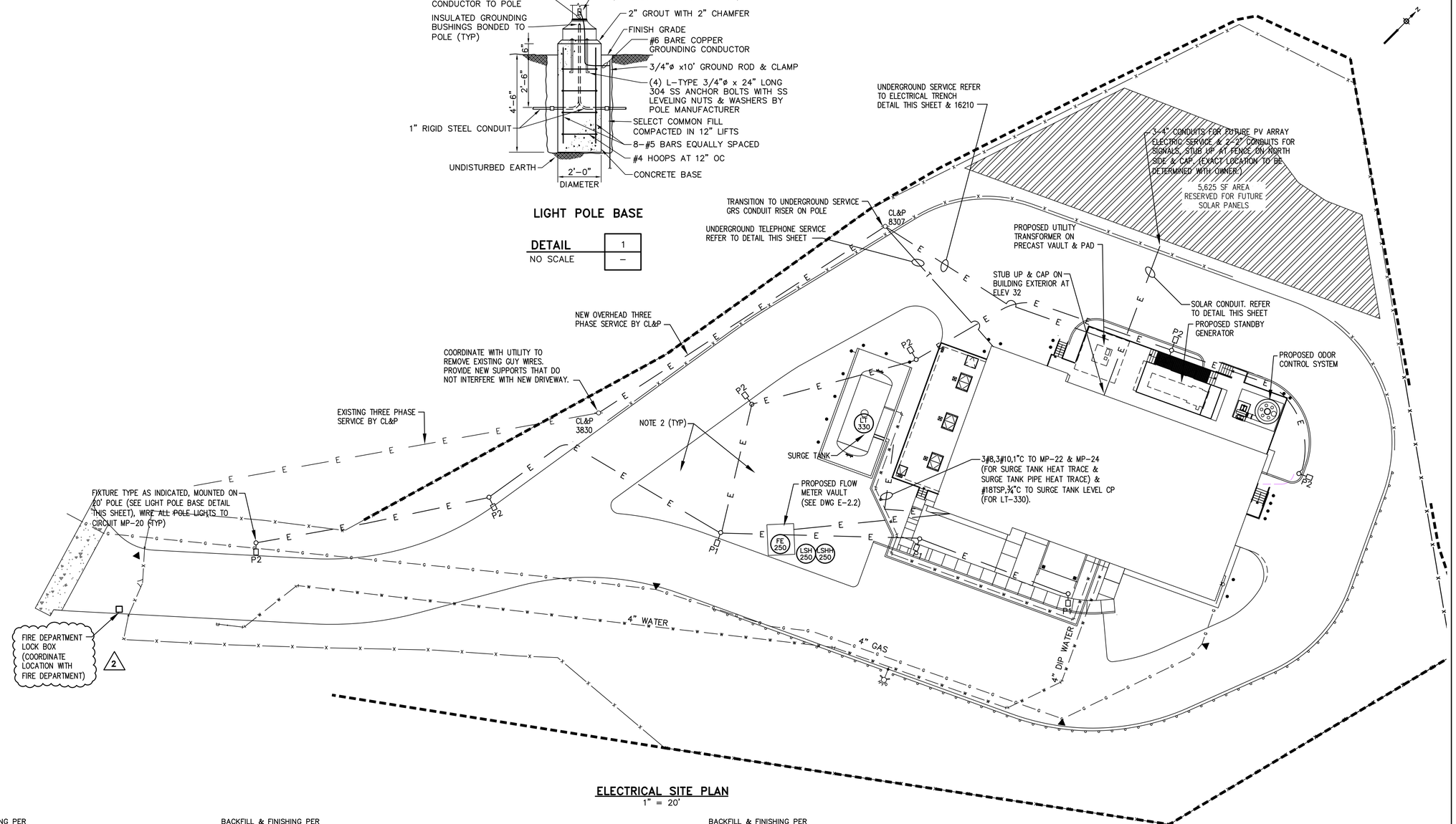

ELECTRICAL SITE PLAN

1" = 20'

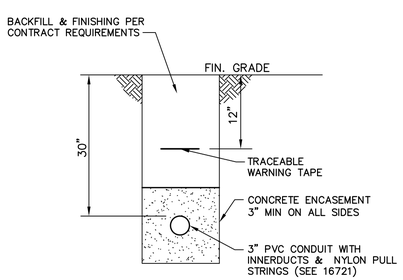

UNDERGROUND TELEPHONE SERVICE DETAIL

NO SCALE

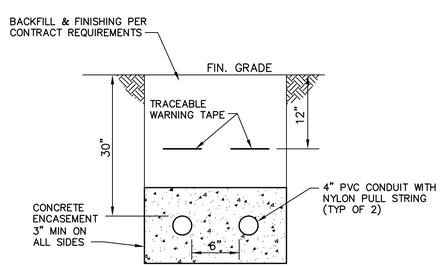

ELECTRICAL TRENCH DETAIL

NO SCALE

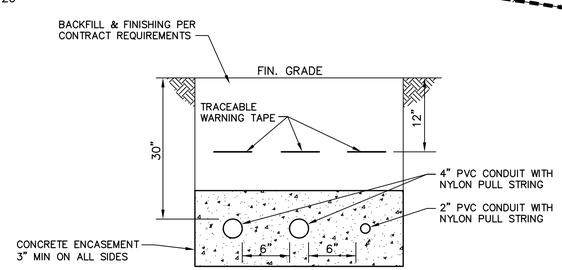

SOLAR CONDUIT TRENCH DETAIL

NO SCALE

NOTES:

1. ALL EXTERIOR CONDUITS ENTERING THE BUILDING FROM OUTDOORS/BELOW GRADE LOCATION SHALL ENTER THE BUILDING ABOVE ELEVATION 31 (1 FOOT AFF), UNLESS OTHERWISE INDICATED ON E-5.1.
2. CONDUIT FOR POLE LIGHTING SHALL BE CONCRETE ENCASED (MIN 3" AROUND ALL SIDES) BELOW PAVEMENT. FEED ALL POLE LIGHTING FROM CIRCUIT MP-20 USING 3#10,3/4"C.

CDR MAGUIRE
2080 Silas Deane Highway
Rocky Hill, Connecticut
TEL. (860) 563-3158
www.cdrmaguire.com

Tighe&Bond
Consulting Engineers
www.tighebond.com

REVISIONS

Number	Description	Date
1	ADDRESS DEEP REVIEW	5/6/2016
2	BID ADDENDUM 2	7/12/2016

FRANCIS T. PATNAUDE INTER-MUNICIPAL PUMPING STATION

MIDDLETOWN, CT

ELECTRICAL SITE PLAN

PROJECT NUMBER: 14712
DESIGNED BY: MJR
DRAWN BY: REJ
DATE: FEBRUARY 23, 2016

SHEET NUMBER:

E-1.2

DRAWING FILE: Q:\Projects\W\W1320\E-1.2.dwg PLOTTED: Jul 12,2016-9:19am BY: tmp

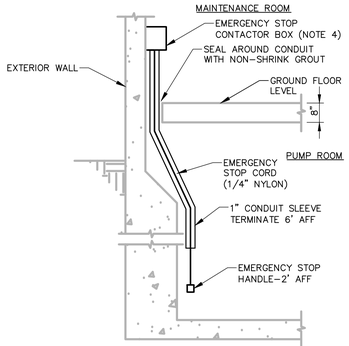

PUMP EMERGENCY STOP DETAIL (TYPICAL)
NO SCALE

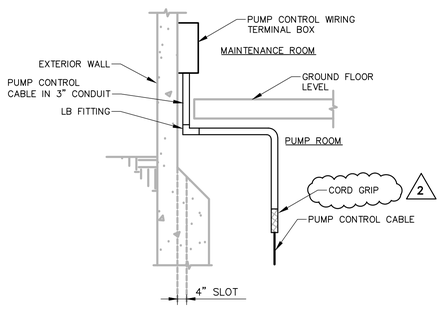

PUMP CONTROL WIRING TERMINAL BOX DETAIL (TYPICAL)
NO SCALE

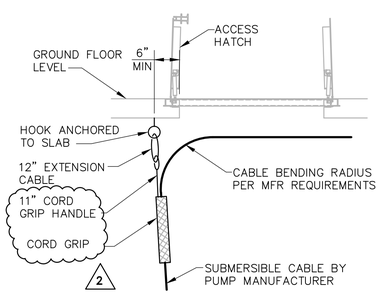

PUMP POWER CABLE SUPPORT DETAIL
NO SCALE

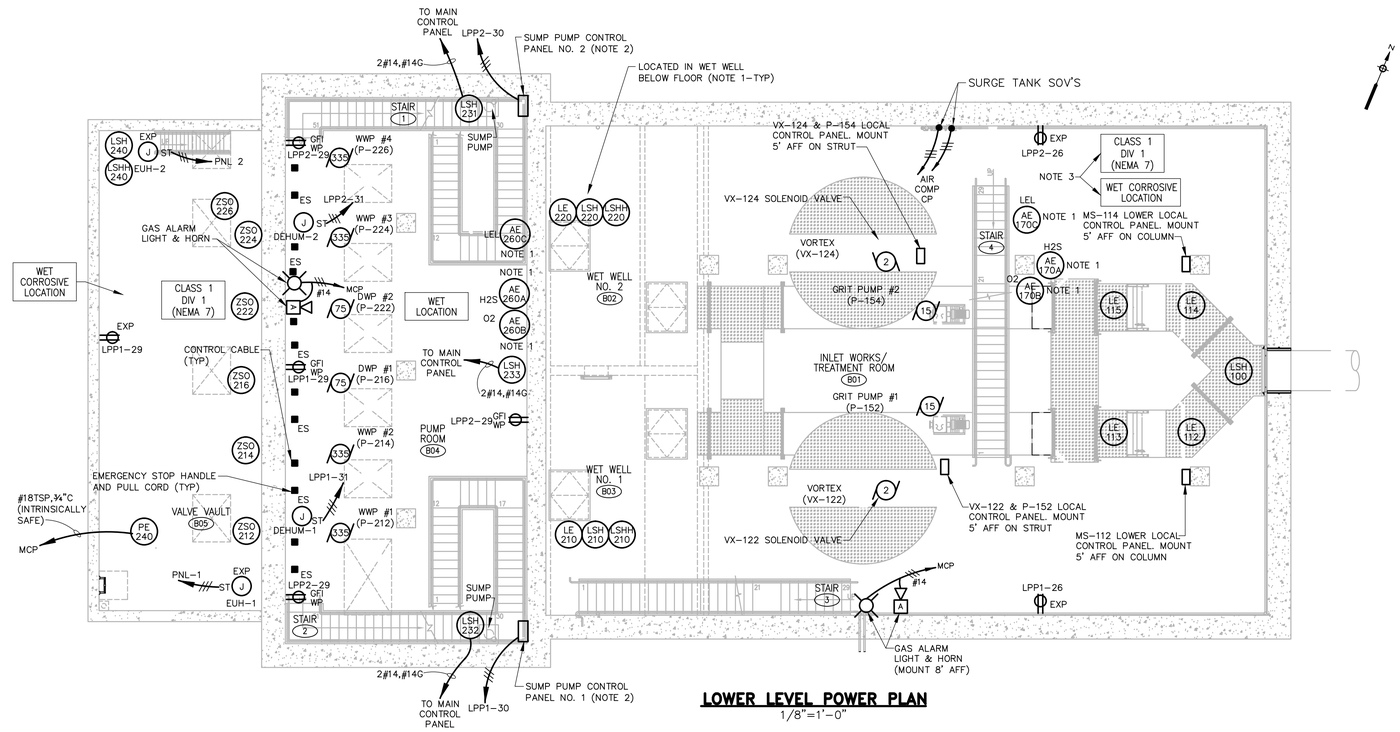

LOWER LEVEL POWER PLAN
1/8"=1'-0"

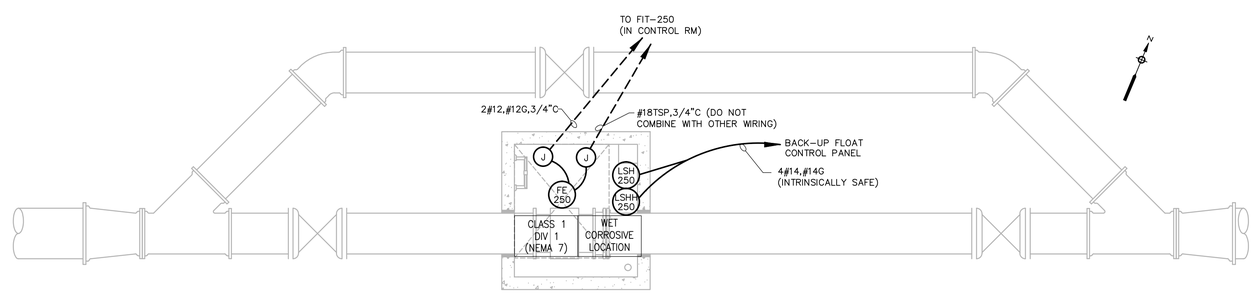

FLOW METER VAULT
1/4"=1'-0"

NOTES:

1. MOUNT AT ELEVATION RECOMMENDED BY MANUFACTURER.
2. RUN 2#12,#12G,3/4"C FROM 1/2HP SUMP PUMP TO SUMP PUMP CONTROL PANEL.
3. EQUIPMENT IN THIS LOCATION SHALL BE RATED FOR CLASS 1, DIV 1 LOCATIONS AND SHALL BE SUITABLE FOR WET, CORROSIVE LOCATIONS. INTRINSICALLY SAFE ENCLOSURES SHALL BE NEMA 4X.
4. PROVIDE DOUBLE POLE, SINGLE THROW CONTACTOR THAT ACTIVATES WHEN PULLCORD IS PULLED.

CDR MAGUIRE
2080 Silas Deane Highway
Rocky Hill, Connecticut
TEL. (860) 563-3158
www.cdrmaguire.com

Tighe&Bond
Consulting Engineers
www.tighebond.com

REVISIONS

Number	Description	Date
1	ADDRESS DEEP REVIEW	5/6/2016
2	BID ADDENDUM 2	7/12/2016

FRANCIS T. PATNAUDE INTER-MUNICIPAL PUMPING STATION

MIDDLETOWN, CT

LOWER LEVEL, FLOW METER VAULT ELECTRICAL POWER PLAN

PROJECT NUMBER: 14712
DESIGNED BY: MJR
DRAWN BY: REJ
DATE: FEBRUARY 23, 2016

SHEET NUMBER:

E-2.2

DRAWING FILE: Q:\Projects\M\M1325\E-2.2.dwg PLOTTED: Jul 12,2016-9:22am BY: trep

Panel Designation:	**Panelboard LPP1**	Location:	**Electrical Room**
Amperage / Mains:	150	AIC:	**10K**
Voltage / Phase	208/120V, 3	Feeder:	**4#1/0,1#6G, 2"C**
Mounting	Surface	Computer/TVSS:	**No**

CIRCUIT BREAKER AMP	POLES	LOAD DESCRIPTION	LTG KVA	REC KVA	MISC KVA	A	B	C	MISC KVA	REC KVA	LTG KVA	LOAD DESCRIPTION	CIRCUIT BREAKER AMP	POLES	
30	2	Split Unit #1			2.5	5.0			2.5			Split Unit #3	30	2	2
-	-	-			2.5		5.0		2.5			-	-	-	4
20	1	Surge Tank Level Control Panel			0.1			0.5	0.5			Fire Alarm System	20	1	6
20	1	Miscellaneous HVAC North			0.7	3.5			2.8			Range	50	2	8
20	1	Recept. Kitchen			1.0		3.8		2.8			-	-	-	10
20	1	Boiler HVB-1			0.5			1.5		1.0		Refrigerator Receptacle	20	1	12
20	1	Gas Panels			0.4	1.2					0.8	Lighting Exterior	20	1	14
20	1	Recept. Maintenance & Control Rooms & North Stairs		1.3			1.4		0.1			Security System	20	1	16
20	1	Main Control Panel - Circuit 1			0.3			1.5			1.3	Lighting-Office, Kitchen, Mech Rm, Vestibule, Contrl Rm, Hall/Lobby	20	1	18
20	1	Recept. Mech Room & Exterior		1.3		2.1					0.8	Lighting-Workshop, Show er, Toilet, Locker/Laundry, Janitor	20	1	20
20	1	Spare					1.2				1.2	Lighting - Maintenance, Pump & Electrical Rooms	20	1	22
20	1	Recept. Office & Workshop		1.1				1.3	0.2			Odor Control Drain Heat Trace	20	1	24
20	1	EF-1 & EF-6			1.2	1.6				0.4		Recept.Screen/Grit & Inlet/Treat Rm	20	1	26
20	1	Recept - Roof		0.5			1.1		0.6			Maint. Room Rollup Overhead Door	20	1	28
20	1	Recept. - Pump Room & Valve Vault		0.5				1.7	1.2			Sump Pump No. 1	20	1	30
20	1	Dehumidifier (Dehum-1)			1.4	1.5			0.1			Sodium Hypochlorite Alarm Panel	20	1	32
20	1	EF-2			1.7		2.5		0.8			Hot Water Pump P-3	20	2	34
20	1	Recept. Workshop		0.5				1.4	0.8			-	-	-	36
20	1	P-320 (Receptacle)			0.3	0.3						Spare	20	1	38
20	1	HVAC Control Panel			0.5		0.5					Spare	20	1	40
20	1	Hot Water Pump P-1			0.9			0.9				Spare	20	1	42
						15.1	15.4	8.9							
		Connected Load (KVA):	0.0	5.2	13.9				14.9	1.4	4.1			**Poles Used:**	42
		Computed Load * (KVA):	0.0	5.2	11.1				11.9	1.4	4.1				

* per NEC 220-10

Total Connected Load (KVA):	**39.4**	Computed Load (A):	93
Total Computed Load * (KVA):	**33.7**	125% of Computed Load (A):	117

Panel Designation:	**Panelboard MP**	Location:	**Electrical Room**
Amperage / Mains:	225	AIC:	**35K**
Voltage / Phase	480/277V, 3	Feeder:	**4#4/0,1#4G, 2-1/2"C**
Mounting	Surface	Computer/TVSS:	**No**

CIRCUIT BREAKER AMP	POLES	LOAD DESCRIPTION	LTG KVA	REC KVA	MISC KVA	A	B	C	MISC KVA	REC KVA	LTG KVA	LOAD DESCRIPTION	CIRCUIT BREAKER AMP	POLES	
15	3	Rof Top Unit (RTU-1)			2.0	6.3			6.3			Heat Recovery Unit (HRV-1)	35	3	2
-	-	-			2.0		6.3		6.3			-	-	-	4
-	-	-			2.0			6.3	6.3			-	-	-	6
20	3	Exhaust Fan EF-3 (7.5HP)			3.0	7.5			4.5			Make Up Air Unit (MAU-1)	25	3	8
-	-	-			3.0		7.5		4.5			-	-	-	10
-	-	-			3.0			7.5	4.5			-	-	-	12
20	3	Grit Vortex Pump (VX-122)			1.4	8.9			7.5			Odor Control Fan	60	3	14
-	-	-			1.4		8.9		7.5			-	-	-	16
-	-	-			1.4			8.9	7.5			-	-	-	18
20	3	Panelboard GEN			3.4	4.7					1.3	Lighting, Site Pole Lights	20	1	20
-	-	-			3.4		6.4		5.0			Surge Tank Heat Trace	30	1	22
-	-	-			3.4			5.4	2.0			Surge Tank Piping, Plant Wtr Heat Trace	20	1	24
20	3	Monorail (Maintenance Room)			0.5	0.7			0.2			Overhead Rollup Doors	20	3	26
-	-	-			0.5		0.7		0.2			-	-	-	28
-	-	-			0.5			0.7	0.2			-	-	-	30
40	3	Surge Tank Air Comp. CP			7.5	7.5						Dock Leveler	20	3	32
-	-	-			7.5		7.5					-	-	-	34
-	-	-			7.5			7.5				-	-	-	36
20	3	Spare				3.6					3.6	Lighting, Screen/Inlet Rm & Valve Vault	20	1	38
-	-	-					3.6				3.6	Lighting, Screen/Inlet Rm & Valve Vault	20	1	40
-	-	-						0.0				Spare	20	1	42
						41.2	44.3	38.3							
		Connected Load (KVA):	0.0	0.0	53.5				62.5	0.0	8.5			**Poles Used:**	42
		Computed Load * (KVA):	0.0	0.0	42.8				50.0	0.0	8.5				

* per NEC 220-10

Total Connected Load (KVA):	**124.5**	Computed Load (A):	122
Total Computed Load * (KVA):	**101.3**	125% of Computed Load (A):	152

Panel Designation:	**Panelboard LPP2**	Location:	**Electrical Room**
Amperage / Mains:	150	AIC:	**10K**
Voltage / Phase	208/120V, 3	Feeder:	**4#1/0,1#6G, 2"C**
Mounting	Surface	Computer/TVSS:	**No**

CIRCUIT BREAKER AMP	POLES	LOAD DESCRIPTION	LTG KVA	REC KVA	MISC KVA	A	B	C	MISC KVA	REC KVA	LTG KVA	LOAD DESCRIPTION	CIRCUIT BREAKER AMP	POLES	
30	2	Split Unit #2			2.5	5.0			2.5			Split Unit #4	30	2	2
-	-	-			2.5		5.0		2.5			-	-	-	4
20	1	Main Control Panel-Circuit 2			0.3			0.3				Spare	20	1	6
20	1	Miscellaneous HVAC South			0.9	3.1				2.2		Dryer Receptacle	30	2	8
20	1	Recept. Kitchen			1.0		3.2		2.2			-	-	-	10
20	1	Boiler HWB-2			0.5			1.5		1.0		Washing Machine Recept	20	1	12
20	1	Spare			0.4	1.5			1.1			Split Unit #5	15	2	14
20	1	Recept. Maintenance & Control Rm & South Stairs		1.3			2.4		1.1			-	-	-	16
20	1	Recept Vending Machine		0.2				0.2				Spare	20	1	18
20	1	Recept. Mechanical Room & Exterior		1.3		1.3						Spare	20	1	20
20	1	Recept. Locker/Laundry, Toilet & Janitor Rooms		0.9			2.1				1.2	Lighting - Maintenance, Pump & Electrical Rooms	20	1	22
20	1	Recept. Office & Workshop		1.3				1.5	0.2			Water Heater GWH-1	20	1	24
20	1	EF-4 & EF-5 & DF-1			1.2	1.5				0.4		Recept.Screen/Grit & Inlet/Treat Rm	20	1	26
20	1	Recept - Roof		0.5			1.1		0.6			Spare	20	1	28
20	1	Recept. - Pump Room		0.4				1.6	1.2			Sump Pump No. 2	20	1	30
20	1	Dehumidifier (Dehum-2)			1.4	2.3			0.8			Hot Water Pump P-4	20	2	32
20	1	Hot Water Pump P-2			0.9		1.7		0.8			-	-	-	34
20	1	Spare						0.4	0.4			Spare	20	1	36
20	1	Spare				5.0						Spare	20	1	38
20	1	Spare					5.0					Spare	20	1	40
20	1	Spare						5.0				Spare	20	1	42
						14.7	15.5	5.4							
		Connected Load (KVA):	0.0	5.8	11.6				13.5	3.6	1.2			**Poles Used:**	42
		Computed Load * (KVA):	0.0	5.8	9.2				10.8	3.6	1.2				

* per NEC 220-10

Total Connected Load (KVA):	**35.6**	Computed Load (A):	85
Total Computed Load * (KVA)	**30.6**	125% of Computed Load (A):	106

2

LIGHTING FIXTURE SCHEDULE

ID	TYPE	MANUFACTURER (NOTE 2)	MODEL #	LAMP QNTY	LAMP TYPE	WATTS/ FIXTURE	NOTES
A	2'x4' Perf Basket	Columbia	STE24-228G-MPO-EPU	2	28W T5	70	
A2	2'x4' Perf Basket	Columbia	STE24-328G-MPO-EPU	3	28W T5	70	
B	2'x2' Perf Basket	Columbia	STE22-214G-MPO-E104U	2	14W T5	35	
B1	2'x2' Perf Basket	Columbia	STE22-214G-MPO-E104U-EL	2	14W T5	35	w/ Emergency Ballast
C	Not Used	-	-	-	-	-	-
D	1'x4' Industrial Strip	Columbia	KL4-228-U-EPU	2	28W T5	70	
D1	1'x4' Industrial Strip	Columbia	KL4-228-U-EPU-EL	2	28W T5	70	w/ Emergency Ballast
E	Emergency Light	Dual-Lite	EZ-2-I	2	5.4W, 6V	12	Emergency Light, environmental rating shall be suitable for installation location
E2	Emergency Light	Dual-Lite	EX-1CD1228 with REX1CDW1228 remote heads	2	28W, 12V	56	Explosion proof Emergency Light with 2 heads per unit. Provide EXIT option and/or remote heads where shown
F	Explosion Proof Fixture	Hubbell	HBLH-72LU-5K-1-070-WH	-	169W LED	169	Rated for Class I Div 1 locations
G	Exterior Light	Hubbell	LCC-12LD-1	9	LED	12.8	Exterior Wall Pack
H	Shower Light	Prescolite	DBXQCSBH-TL64	1	A-19 INC	60	Wet Location
J	Sealed 4', wet location	Day-Brite	V2WPT228-120-1/2-EB	2	28W T5	70	Sealed, gasketed, rated for wet locations
K	Dock Light	Phoenix	DL-INC-DWT-60	1	200W INC	200	Aluminum powder coat w/ guard
L	Cove Lighting	Columbia	COV4-128-EPU	1	28W T5	32	
M	Exterior Pendant Can Downlight	Prescolite	DB7163PLT32IPMBZ	1	32W CFL	32	Pendant 18"
N	Exterior Wall Pack	Gardco	101EMC-MT-226QF-UNIV-BLF	2	26W CFL	52	Wall Pack w/ emegency battery backup & 0-degree starting
P1	Exterior Pole Mounted Light	Sternberg	1A-AP650-CA-20L45T3-F -MDL14-BK	-	100W LED	100	Pole Mounted LED (NOTE 1)
P2	Exterior Pole Mounted Light	Sternberg	1A-AP650-CA-20L45T2BL-F -MDL07-BK	-	49W LED	49	Pole Mounted LED (NOTE 1)
X	Exit Sign	Dual-Lite	LXU-RWEI	-	LED	-	Exit Sign, rating shall be suitable for installation location
X4	Exit Sign	Dual-Lite	12XPB-75P-EX100-CD	1	12V INC	6	Explosion Proof

NOTES: 1. Mounte on 20 foot square straight steel pole (4" Black). Coordinate bolt pattern with pole base supplier.
2. Fixtures shall be by manufacturer listed or equal by Day Brite, Lithonia, Hubbel, or equal.

CDR MAGUIRE
2080 Silas Deane Highway
Rocky Hill, Connecticut
TEL. (860) 563-3158
www.cdrmaguire.com

Tighe&Bond
Consulting Engineers
www.tighebond.com

REVISIONS

Number	Description	Date
1	ADDRESS DEEP REVIEW	5/6/2016
2	BID ADDENDUM 2	7/12/2016

FRANCIS T. PATNAUDE INTER-MUNICIPAL PUMPING STATION

MIDDLETOWN, CT

PANEL SCHEDULES AND LIGHTING FIXTURE SCHEDULE

PROJECT NUMBER: 14712
DESIGNED BY: MJR
DRAWN BY: REJ
DATE: FEBRUARY 23, 2016

SHEET NUMBER:

E-6.1

DRAWING FILE: O:\Projects\M\M1325\E-6.1.dwg PLOTTED: Jul 12,2016-9:25am BY: trop

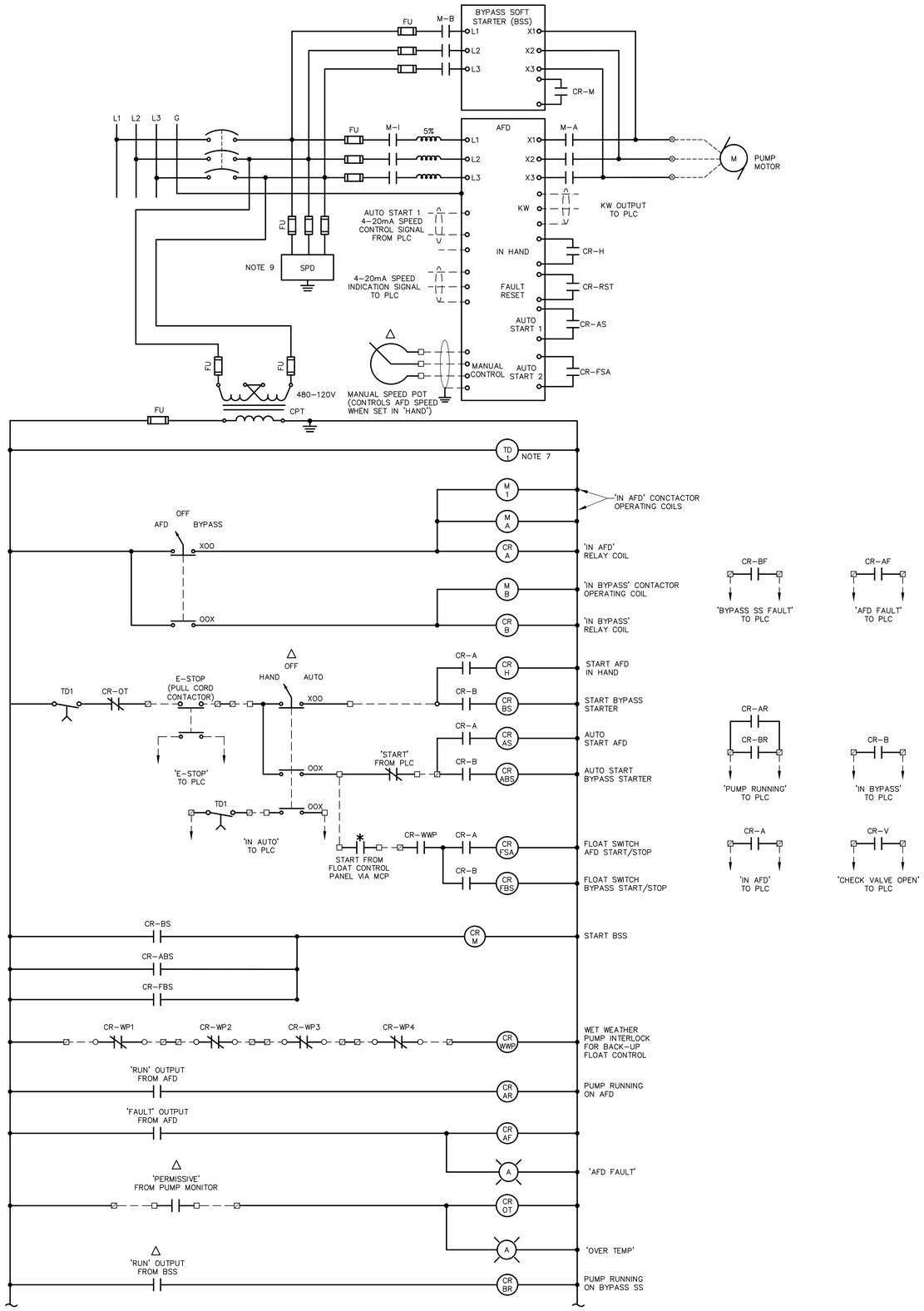

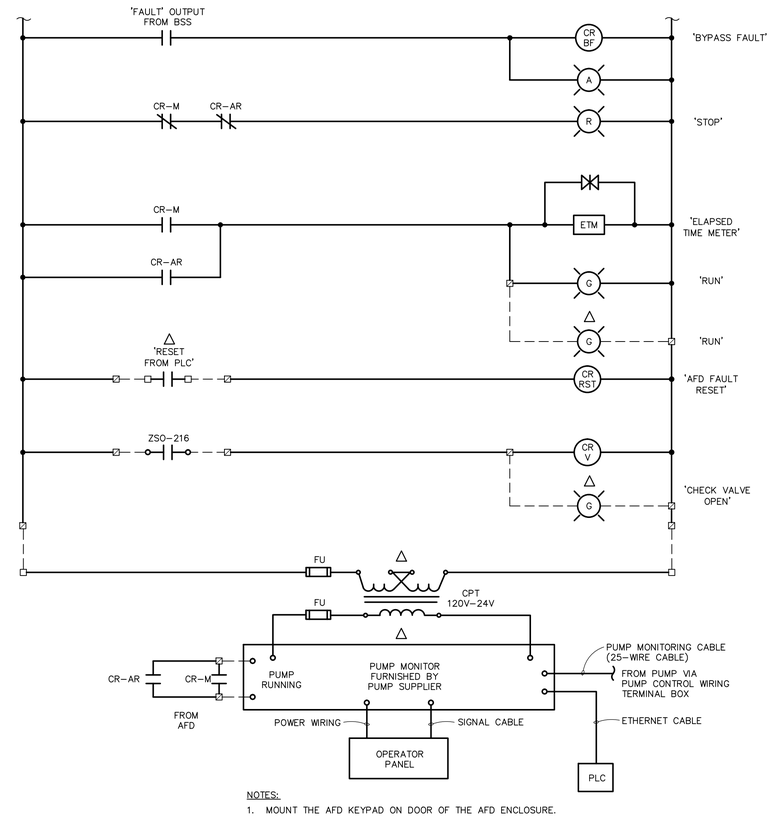

NOTES:

1. MOUNT THE AFD KEYPAD ON DOOR OF THE AFD ENCLOSURE.
2. THE H-O-A SWITCH, MANUAL SPEED POT, VALVE OPEN LIGHT, AND 'RUN' LIGHT SHALL BE MOUNTED ON THE DOOR OF THE AFD ENCLOSURE.
3. THE E-STOP CONTACTOR SHALL BE MOUNTED IN THE MAINTENANCE ROOM.
4. WHEN IN 'HAND', THE AFD SPEED SHALL BE PACED BY THE SPEED POT; WHEN IN 'AUTO', THE AFD SHALL BE PACED BY THE 4-20MA SPEED CONTROL SIGNAL.
5. PROVIDE A 3-CONTACTOR BYPASS SYSTEM FOR THE AFD'S IN THE AFD ENCLOSURE. THE AFD/BYPASS SELECTION SWITCH SHALL BE MOUNTED ON THE DOOR OF THE AFD ENCLOSURE.
6. THE PUMP MONITOR SHALL BE LOCATED IN THE MAIN CONTROL PANEL.
7. SET TIME DELAY FOR P-216 AT 10 SECONDS. SET TIME DELAY FOR P-222 AS REQUIRED BUT NO LESS THAN 20 SECONDS.
8. PROGRAM AFD TO RUN AT SPEED BASED ON PLC SPEED CONTROL INPUT SIGNAL WHEN STARTED BY "AUTO START #1 INPUT". PROGRAM AFD TO RUN AT PRE-PROGRAMED SPEED WHEN STARTED BY "AUTO START #2 INPUT".
9. PROVIDE SURGE PROTECTOR SIZED IN ACCORDANCE WITH AFD MANUFACTURER'S RECOMMENDATION.

DRY WEATHER PUMP AFD WIRING DIAGRAM WITH FLOAT CONTROL

TYPICAL OF: P-216
TYPICAL OF P-222 EXCEPT EXCHANGE ZSO-216 WITH ZSO-222, CR-2 WITH CR-4 AND CR-3 WITH CR-5 FOR FLOAT CONTROL.

GENERAL NOTES:

1. PRIOR TO INSTALLING ANY CONDUITS OR PULLING ANY WIRE, CONFIRM WIRING REQUIREMENTS WITH THE EQUIPMENT AND/OR SYSTEM SUPPLIER'S SUBMITTED WIRING DIAGRAMS. CONTACT THE ENGINEER TO RESOLVE ANY DISCREPANCIES.
2. PRIOR TO PERFORMING WIRING ON VENDOR SUPPLIED CONTROL PANELS AND VENDOR SUPPLIED EQUIPMENT, THE CONTRACTOR SHALL COORDINATE EXACT WIRING CONNECTIONS FROM VENDOR SUPPLIED WIRING DIAGRAMS. IF THERE ARE ANY DISCREPANCIES, REPORT THIS TO THE ENGINEER AND THE ENGINEER WILL PROVIDE DIRECTION ON HOW TO PROCEED.
3. THE MONITORING SYSTEM DESIGN MAY VARY BASED ON THE PUMP MANUFACTURER. COORDINATE PUMP MANUFACTURER, OTHER VENDORS AND ENGINEER TO RESOLVE THE DESIGN PRIOR TO STARTING FIELD INSTALLATION. (2)

WIRING DIAGRAM SYMBOLS

- -------- FIELD WIRING
- —o DEVICE TERMINAL
- □ PLC OR I/O TERMINAL
- ⊠ CONTROL PANEL TERMINAL
- △ LOCATED IN MAIN CONTROL PANEL
- * LOCATED IN BACK-UP FLOAT CONTROL PANEL

CDR MAGUIRE
2080 Silas Deane Highway
Rocky Hill, Connecticut
TEL. (860) 563-3158
www.cdrmaguire.com

Tighe&Bond
Consulting Engineers
www.tighebond.com

REVISIONS

Number	Description	Date
1	ADDRESS DEEP REVIEW	5/6/2016
2	BID ADDENDUM 2	7/12/2016

FRANCIS T. PATNAUDE INTER-MUNICIPAL PUMPING STATION

MIDDLETOWN, CT

WIRING DIAGRAMS 1

PROJECT NUMBER: 14712
DESIGNED BY: MJR
DRAWN BY: REJ
DATE: FEBRUARY 23, 2016

SHEET NUMBER:

E-7.1

DRAWING FILE: O:\Projects\M\M1325\E-7.1.dwg PLOTTED: Jul 12,2016-9:29am BY: tmp

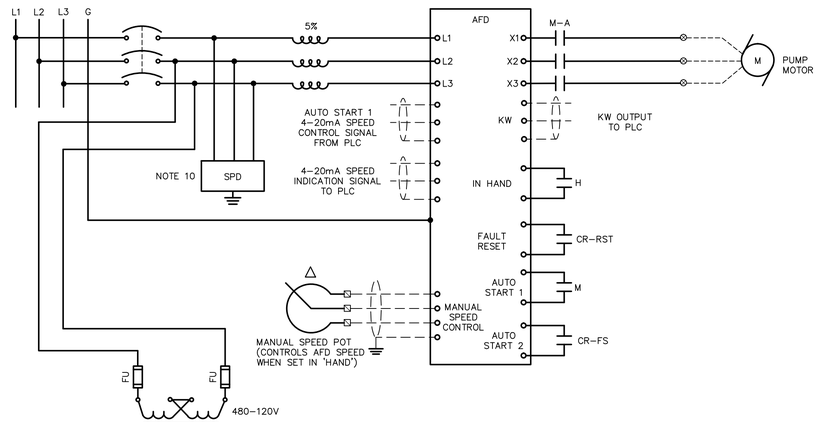

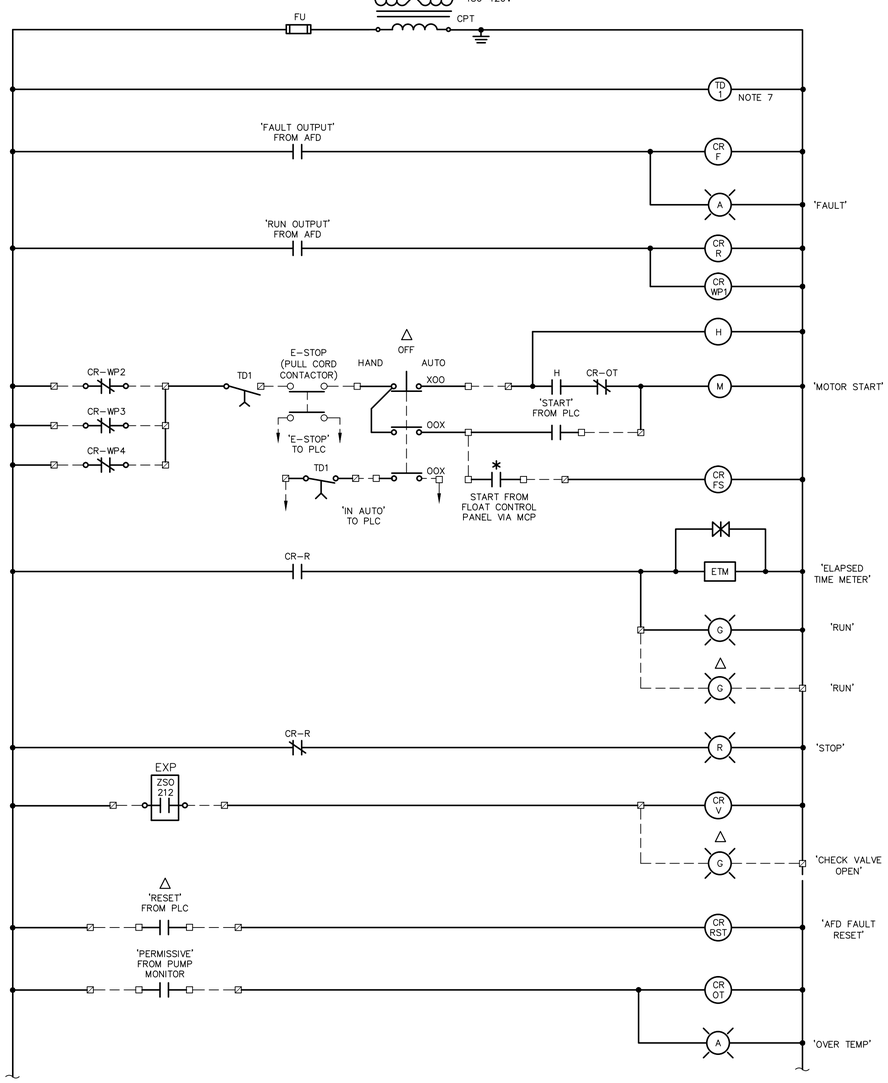

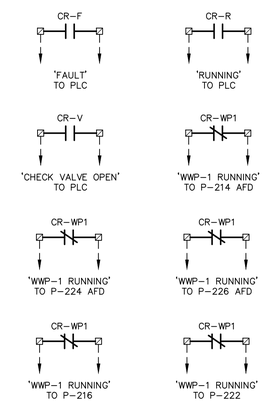

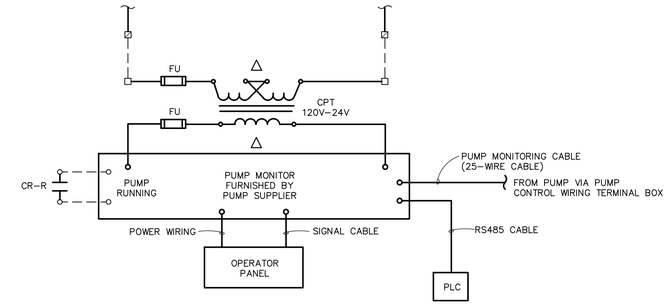

NOTES:

1. MOUNT THE AFD KEYPAD ON DOOR OF THE AFD ENCLOSURE.
2. THE H-O-A SWITCH, MANUAL SPEED POT, VALVE OPEN LIGHT, AND A 'RUN' LIGHT SHALL BE MOUNTED ON THE DOOR OF THE AFD ENCLOSURE.
3. THE E-STOP CONTACTOR SHALL BE MOUNTED IN THE MAINTENANCE ROOM.
4. WHEN IN 'HAND', THE AFD SPEED SHALL BE PACED BY THE SPEED POT; WHEN IN 'AUTO' AND 'AUTO START 1', THE AFD SHALL BE PACED BY THE 4-20MA SPEED CONTROL SIGNAL.
5. NO MORE THAN 3 PUMPS ARE PERMITTED TO RUN SIMULTANEOUSLY.
6. THE PUMP MONITOR SHALL BE LOCATED IN THE MAIN CONTROL PANEL.
7. SET TIME DELAY AT 10 SECONDS FOR P-212, SET TIME DELAY FOR THE OTHER PUMPS AS REQUIRED AT INCREASINGLY LONGER TIMES BUT NO LESS THAN 20 SECONDS FOR P-214, NO LESS THAN 30 SECONDS FOR P-224, AND NO LESS THAN 40 SECONDS FOR P-226.
8. PROVIDE THE FOLLOWING WARNING LABEL NEAR THE CR-1 RELAY INSIDE THE WWP-1 PUMP AFD ENCLOSURE: "WARNING: CONTROL RELAY CR-1 IS AN INTERLOCK RELAY THAT PREVENTS MORE THAN THREE WET WEATHER PUMPS FROM OPERATING. DISTURBING THE CR-1 RELAY OR RELATED WIRING MAY PERMIT FOURTH PUMP TO OPERATE OR PREVENT ADDITIONAL PUMPS FROM OPERATING". PROVIDE THE SAME WARNING LABEL FOR THE OTHER WET WEATHER PUMPS, CHANGING THE CONTROL RELAY ID NUMBER.
9. PROGRAM AFD TO RUN AT SPEED BASED ON PLC SPEED CONTROL INPUT SIGNAL WHEN STARTED BY "AUTO START #1 INPUT". PROGRAM AFD TO RUN AT PRE-PROGRAMED SPEED WHEN STARTED BY "AUTO START #2 INPUT".
10. PROVIDE SURGE PROTECTOR SIZED IN ACCORDANCE WITH AFD MANUFACTURER'S RECOMMENDATIONS.

WET WEATHER PUMP AFD WIRING DIAGRAM

TYPICAL OF: P-212

TYPICAL OF: P-214 EXCEPT EXCHANGE CR-WP1 WITH CR-WP2 AND CONNECT CR-WP2 N.C. CONTACTS TO P-212, P-224, AND P-226 AFDS, AND EXCHANGE ZSO-212 WITH ZSO-214

TYPICAL OF: P-224 EXCEPT EXCHANGE CR-WP1 WITH CR-WP3 AND CONNECT CR-WP3 N.C. CONTACTS TO P-212, P-214, AND P-226 AFDS, AND EXCHANGE ZSO-212 WITH ZSO-224.

TYPICAL OF: P-226 EXCEPT EXCHANGE CR-WP1 WITH CR-WP4 AND CONNECT CR-WP4 N.C. CONTACTS TO P-212, P-214, AND P-224 AFDS, AND EXCHANGE ZSO-212 WITH ZSO-226.

GENERAL NOTES:

1. PRIOR TO INSTALLING ANY CONDUITS OR PULLING ANY WIRE, CONFIRM WIRING REQUIREMENTS WITH THE EQUIPMENT AND/OR SYSTEM SUPPLIER'S SUBMITTED WIRING DIAGRAMS. CONTACT THE ENGINEER TO RESOLVE ANY DISCREPANCIES.
2. PRIOR TO PERFORMING WIRING ON VENDOR SUPPLIED CONTROL PANELS AND VENDOR SUPPLIED EQUIPMENT, THE CONTRACTOR SHALL COORDINATE EXACT WIRING CONNECTIONS FROM VENDOR SUPPLIED WIRING DIAGRAMS. IF THERE ARE ANY DISCREPANCIES, REPORT THIS TO THE ENGINEER AND THE ENGINEER WILL PROVIDE DIRECTION ON HOW TO PROCEED.
3. THE MONITORING SYSTEM DESIGN MAY VARY BASED ON THE PUMP MANUFACTURER. COORDINATE PUMP MANUFACTURER, OTHER VENDORS AND ENGINEER TO RESOLVE THE DESIGN PRIOR TO STARTING FIELD INSTALLATION. (2)

WIRING DIAGRAM SYMBOLS

- -------- FIELD WIRING
- ——o DEVICE TERMINAL
- □ PLC OR I/O TERMINAL
- ⊠ CONTROL PANEL TERMINAL
- △ LOCATED IN MAIN CONTROL PANEL
- ✱ LOCATED IN BACK-UP FLOAT CONTROL PANEL
- ⊗ MCC TERMINAL

CDR MAGUIRE
2080 Silas Deane Highway
Rocky Hill, Connecticut
TEL. (860) 563-3158
www.cdrmaguire.com

Tighe&Bond
Consulting Engineers
www.tighebond.com

REVISIONS

Number	Description	Date
1	ADDRESS DEEP REVIEW	5/6/2016
2	BID ADDENDUM 2	7/12/2016

FRANCIS T. PATNAUDE INTER-MUNICIPAL PUMPING STATION

MIDDLETOWN, CT

WIRING DIAGRAMS 2

PROJECT NUMBER: 14712
DESIGNED BY: MJR
DRAWN BY: REJ
DATE: FEBRUARY 23, 2016

SHEET NUMBER:

E-7.2

DRAWING FILE: G:\Projects\M\M.325\E-7.2.dwg PLOTTED: Jul 12,2016-9:30am BY: tmp

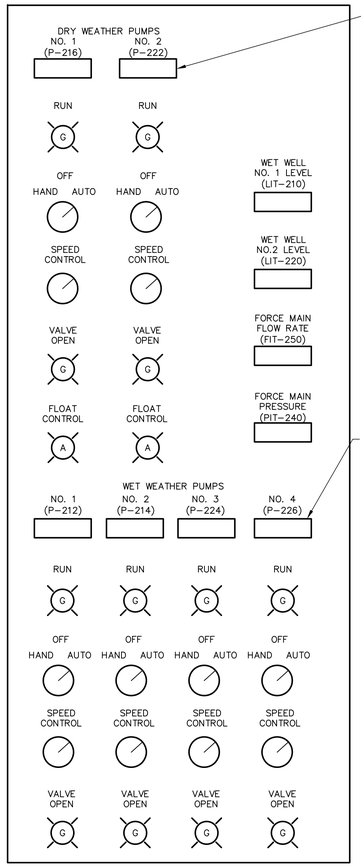

PUMP MONITORING DEVICE OPERATOR PANEL (TYP OF 2)

PUMP MONITORING DEVICE OPERATOR PANEL (TYP OF 4)

NOTE:
LOCATE THE SCADA PLC AND SCADA 1 COMPUTER IN THIS ENCLOSURE. PROVIDE TOUCH SCREEN DISPLAY AND KEYBOARD ON FLIP-DOWN SHELF ON THE FRONT OF PANEL (NOT SHOWN).

MAIN CONTROL PANEL

FURNISHED UNDER DIVISION 13,
INSTALLED BY DIVISION 16.
FIELD WIRING AND CONDUIT BY DIVISION 16.

GENERAL NOTES:

1. PRIOR TO INSTALLING ANY CONDUITS OR PULLING ANY WIRE, CONFIRM WIRING REQUIREMENTS WITH THE EQUIPMENT AND/OR SYSTEM SUPPLIER'S SUBMITTED WIRING DIAGRAMS. CONTACT THE ENGINEER TO RESOLVE ANY DISCREPANCIES.
2. PRIOR TO PERFORMING WIRING ON VENDOR SUPPLIED CONTROL PANELS AND VENDOR SUPPLIED EQUIPMENT, THE CONTRACTOR SHALL COORDINATE EXACT WIRING CONNECTIONS FROM VENDOR SUPPLIED WIRING DIAGRAMS. IF THERE ARE ANY DISCREPANCIES, REPORT THIS TO THE ENGINEER AND THE ENGINEER WILL PROVIDE DIRECTION ON HOW TO PROCEED.
3. THE MONITORING SYSTEM DESIGN MAY VARY BASED ON THE PUMP MANUFACTURER. COORDINATE PUMP MANUFACTURER, OTHER VENDORS AND ENGINEER TO RESOLVE THE DESIGN PRIOR TO STARTING FIELD INSTALLATION.

2

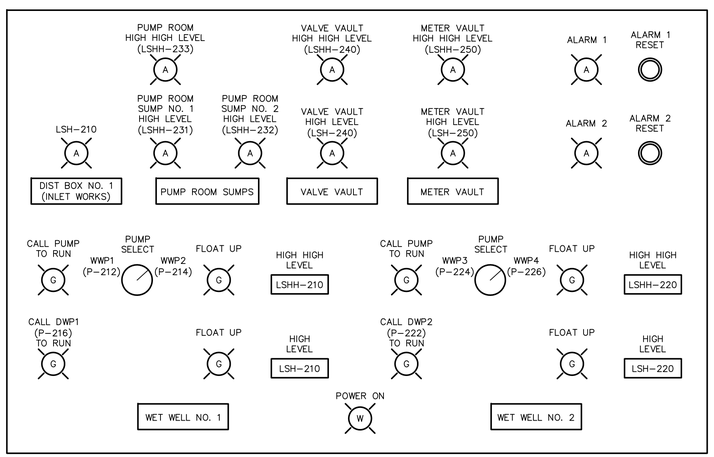

BACK-UP FLOAT CONTROL PANEL

FURNISHED UNDER DIVISION 13,
INSTALLED BY DIVISION 16.
FIELD WIRING AND CONDUIT BY DIVISION 16.

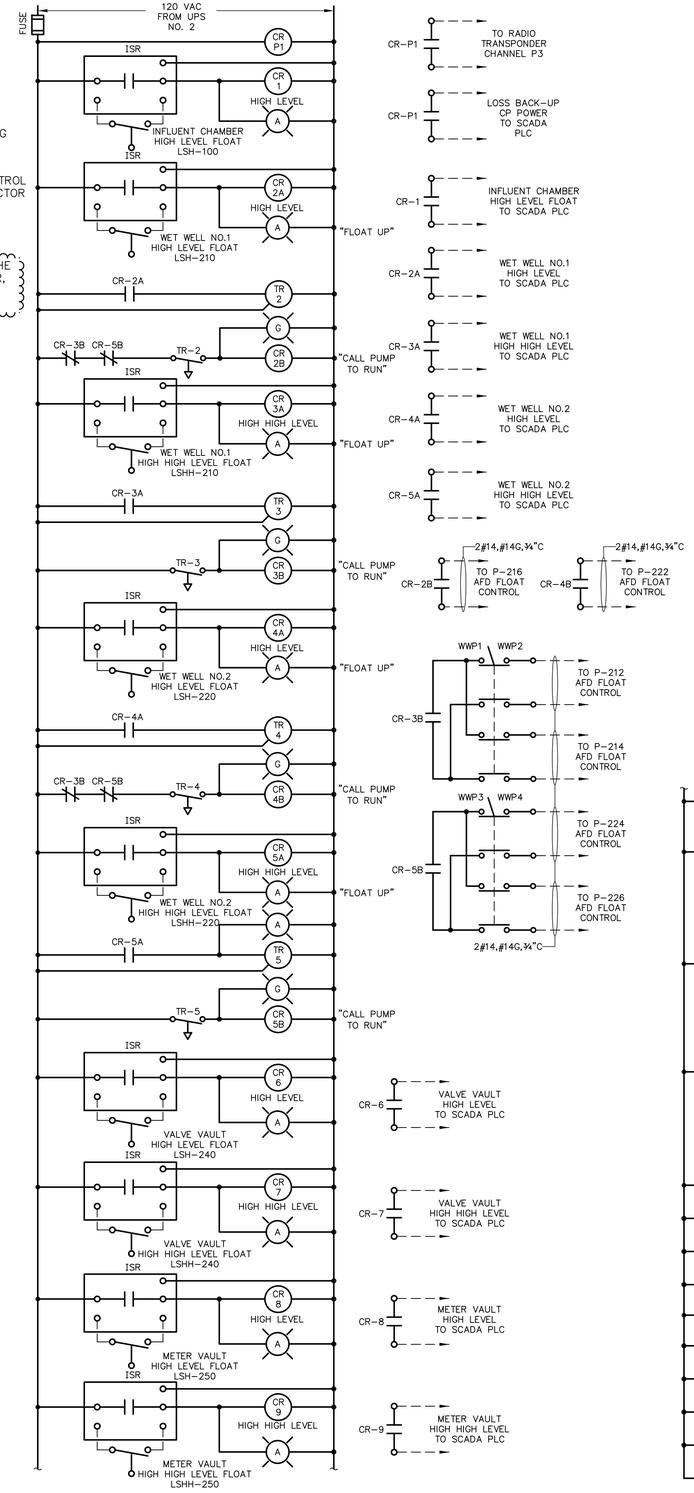

BACK-UP FLOAT & ALARM SYSTEM WIRING

FURNISHED UNDER DIVISION 13,
INSTALLED BY DIVISION 16.
FIELD WIRING AND CONDUIT BY DIVISION 16.

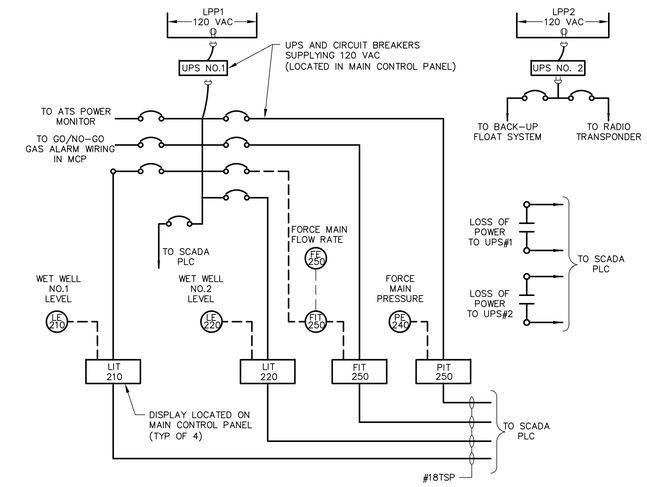

MAIN CONTROL PANEL POWER & INSTRUMENT WIRING

NOTES:

2

1. THE DISPLAYS SHALL BE PRECISION DIGITAL MODEL NO. PD6000-6R3 OR EQUIVALENT BY OMEGA, DEVAR OR EQUAL.
2. THE 120 VAC CIRCUITS AND UPS'S SHALL EACH HAVE ENOUGH CAPACITY TO RUN THE SCADA PLC AND INSTRUMENTS AND TO RUN THE MAIN CONTROL PANEL. EACH UPS SHALL OPERATE SEPARATELY OR TO PLUG BOTH INTO EITHER DUPLEX RECEPTACLE. LIKEWISE THE INTENT IS TO BE ABLE TO PLUG EACH SYSTEM INTO SEPARATE UPS'S AS SHOWN OR TO PLUG BOTH SYSTEMS INTO THE SAME UPS.
3. UPS NO. 1 AND UPS NO. 2 SHALL HAVE LOSS OF 120VAC POWER SUPPLY ALARMS CONNECTED TO THE SCADA PLC AND TO THE RADIO TRANSPONDER.
4. FURNISHED UNDER DIVISION 13, INSTALLED BY DIVISION 16, FIELD WIRING AND CONDUIT BY DIVISION 16.

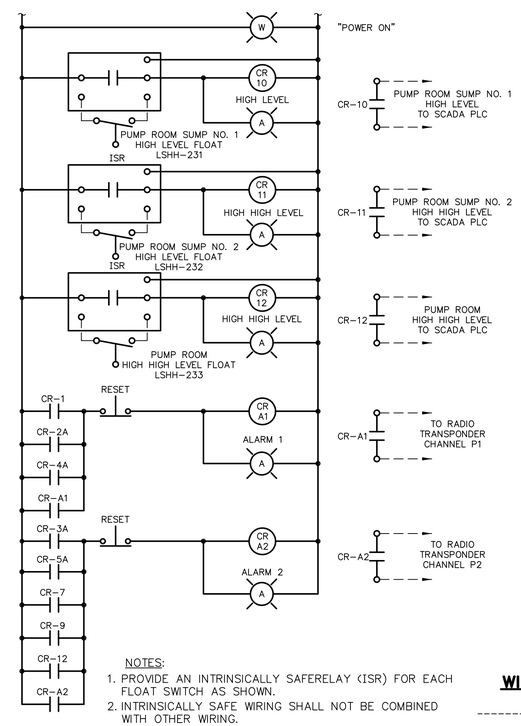

NOTES:

1. PROVIDE AN INTRINSICALLY SAFERELAY (ISR) FOR EACH FLOAT SWITCH AS SHOWN.
2. INTRINSICALLY SAFE WIRING SHALL NOT BE COMBINED WITH OTHER WIRING.
3. PROVIDE 2#12,#12G,26#14,8#14 SPARES,1½"C FROM BACK-UP FLOAT CONTROL PANEL TO MCP. PROVIDE 6#14,2#14 SPARES,¾"C FROM BACK-UP FLOAT CONTROL PANEL TO THE RADIO TRANSPONDER.

WIRING DIAGRAM SYMBOLS

- -------- FIELD WIRING
- ——o DEVICE TERMINAL
- □ PLC OR I/O TERMINAL
- ⊠ LOCAL CONTROL PANEL TERMINAL
- △ LOCATED IN LOCAL CONTROL PANEL

CDR MAGUIRE
2080 Silas Deane Highway
Rocky Hill, Connecticut
TEL. (860) 563-3158
www.cdrmaguire.com

Tighe&Bond
Consulting Engineers
www.tighebond.com

REVISIONS

Number	Description	Date
1	ADDRESS DEEP REVIEW	5/6/2016
2	BID ADDENDUM 2	7/12/2016

FRANCIS T. PATNAUDE INTER-MUNICIPAL PUMPING STATION

MIDDLETOWN, CT

WIRING DIAGRAMS 3

PROJECT NUMBER: 14712
DESIGNED BY: MJR
DRAWN BY: REJ
DATE: FEBRUARY 23, 2016
SHEET NUMBER:

E-7.3

DRAWING FILE: Q:\Projects\WW132\E-7.3.dwg PLOTTED: Jul 12,2016-9:31am BY: tmp